# SCD-555ES

# SERVICE MANUAL

*AEP Model*

Photo: Gold type

| | |
|---|---|
| Model Name Using Similar Mechanism | CDP-D500 |
| CD Mechanism Type | CDM19HN-DVBU4 |
| Base Unit Name | DVBU4 |
| Optical Pick-up Name | KHM-230AAA/J1NP |

## SPECIFICATIONS

### When a super audio CD is played

**Playing frequency range** 2 Hz to 100 kHz

**Frequency response** 2 Hz to 50 kHz (–3 dB)

**Dynamic range** 105 dB or more

**Total harmonic distortion rate** 0.0012 % or less

**Wow and flutter** Value of measurable limit (±0.001 % W. PEAK) or less

### When a CD is played

**Frequency response** 2 Hz to 20 kHz

**Dynamic range** 100 dB or more

**Total harmonic distortion rate** 0.0017 % or less

**Wow and flutter** Value of measurable limit (±0.001 % W. PEAK) or less

### Output connector

| | Jack type | Output level | Load impedance |
|---|---|---|---|
| ANALOG OUT | Phono jacks | 2 Vrms (at 50 kilohms) | Over 10 kilohms |
| DIGITAL (CD) OUT OPTICAL* | Square optical output connector | –18 dBm | (Light emitting wave length: 660 nm) |
| DIGITAL (CD) OUT COAXIAL* | Coaxial output connector | 0.5 Vp-p | 75 ohms |
| PHONES | Stereo phone jack | 20 mW | 32 ohms |

*Output only the audio signals of the CD

### General

**Laser radiant power:** 5.47 uW at 650 nm
*These output is the value measured at a distance of about 200mm from the objective lens surface on the optical pick-up.

**Power requirements** 230 V AC, 50/60 Hz

**Power consumption** 26 W

**Dimensions (w/h/d)** 430 × 130 × 380 mm incl. projecting parts

**Mass (approx.)** 14.5 kg

### Supplied accessories

- Audio connecting cord (phono jack × 2 ←→ phono jack × 2) (1)
- Mains lead (1)
- Remote commander (remote) RM-SX90 (1)
- R06 (size-AA) batteries (2)

Design and specifications are subject to change without notice.

## SUPER AUDIO CD PLAYER

SONY®

## TABLE OF CONTENTS


**1. SERVICING NOTES (1)** ....................................... 3

**2. GENERAL** ................................................................. 6

**3. DISASSEMBLY** ....................................................... 9

**4. DIAGRAMS**

4-1. Notes for Printed Wiring Boards and Schematic Diagrams ...................................................... 15

4-2. Printed Wiring Boards – RF/SWITCH/LOADING MOTOR Boards – ............. 16

4-3. Schematic Diagram – RF/SWITCH/LOADING MOTOR Boards – ............. 17

4-4. Printed Wiring Board – MAIN Board (Component Side) – ............................. 18

4-5. Printed Wiring Board – MAIN Board (Conductor Side) – ................................ 19

4-6. Schematic Diagram – MAIN Board (1/6) – ................. 20

4-7. Schematic Diagram – MAIN Board (2/6) – ................. 21

4-8. Schematic Diagram – MAIN Board (3/6) – ................. 22

4-9. Schematic Diagram – MAIN Board (4/6) – ................. 23

4-10. Schematic Diagram – MAIN Board (5/6) – ................. 24

4-11. Schematic Diagram – MAIN Board (6/6) – ................. 25

4-12. Printed Wiring Board – AUDIO Board (Component Side) – ........................... 26

4-13. Printed Wiring Boards – AUDIO (Conductor Side)/ LINE OUT/HEADPHONE Boards – ............................ 27

4-14. Schematic Diagram – AUDIO Board (1/2) – ............... 28

4-15. Schematic Diagram – AUDIO (2/2)/LINE OUT/ HEADPHONE Boards – ................................................ 29

4-16. Printed Wiring Board – DIGITAL OUT Board –.......... 30

4-17. Schematic Diagram – DIGITAL OUT Board – ............ 31

4-18. Printed Wiring Board – DISPLAY Board – ................. 32

4-19. Schematic Diagram – DISPLAY Board – .................... 33

4-20. Printed Wiring Boards – JOG/KEY/R. CNTL Boards – .................................... 34

4-21. Schematic Diagram – JOG/KEY/R. CNTL Boards – ... 34

4-22. Schematic Diagram – POWER/AC/POWER SWITCH Boards – ................. 35

4-23. Printed Wiring Board – POWER Board (Component Side) – .......................... 36

4-24. Printed Wiring Boards – POWER (Conductor Side)/ AC/POWER SWITCH Boards – ................................... 37

4-25. IC Pin Function Description .......................................... 47

**5. SERVICING NOTES (2)** ....................................... 59

**6. TEST MODE** ............................................................. 60

**7. EXPLODED VIEWS** ............................................... 74

**8. ELECTRICAL PARTS LIST** .............................. 80


CAUTION
Use of controls or adjustments or performance of procedures other than those specified herein may result in hazardous radiation exposure.

This appliance is classified as a CLASS 1 LASER product.
The CLASS 1 LASER PRODUCT MARKING is located on the rear exterior.

The following caution label is located inside the unit.

### Notes on chip component replacement

- Never reuse a disconnected chip component.
- Notice that the minus side of a tantalum capacitor may be damaged by heat.

### Flexible Circuit Board Repairing

- Keep the temperature of the soldering iron around 270 ˚C during repairing.
- Do not touch the soldering iron on the same conductor of the circuit board (within 3 times).
- Be careful not to apply force on the conductor when soldering or unsoldering.

**SAFETY-RELATED COMPONENT WARNING!!**

**COMPONENTS IDENTIFIED BY MARK ⚠ OR DOTTED LINE WITH MARK ⚠ ON THE SCHEMATIC DIAGRAMS AND IN THE PARTS LIST ARE CRITICAL TO SAFE OPERATION. REPLACE THESE COMPONENTS WITH SONY PARTS WHOSE PART NUMBERS APPEAR AS SHOWN IN THIS MANUAL OR IN SUPPLEMENTS PUBLISHED BY SONY.**

# SECTION 1
# SERVICING NOTES (1)

**NOTES ON HANDLING THE OPTICAL PICK-UP BLOCK OR BASE UNIT**

The laser diode in the optical pick-up block may suffer electrostatic break-down because of the potential difference generated by the charged electrostatic load, etc. on clothing and the human body.
During repair, pay attention to electrostatic break-down and also use the procedure in the printed matter which is included in the repair parts.
The flexible board is easily damaged and should be handled with care.

**NOTES ON LASER DIODE EMISSION CHECK**

The laser beam on this model is concentrated so as to be focused on the disc reflective surface by the objective lens in the optical pick-up block. Therefore, when checking the laser diode emission, observe from more than 30 cm away from the objective lens.

**HOW TO OPEN THE DISC TABLE WHEN POWER SWITCH TURNS OFF**

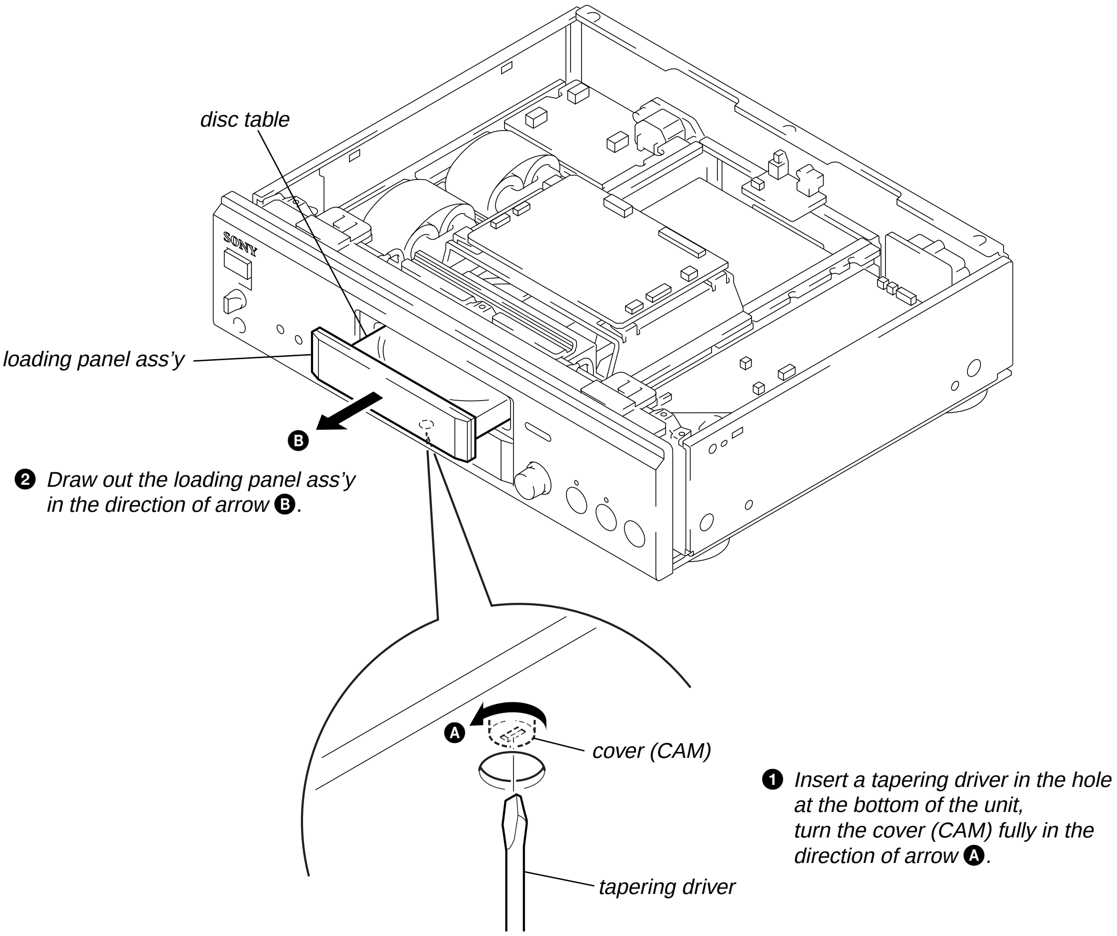

**Note:** Follow the disassembly procedure in the numerical order given.

## AUDIO/POWER BOARDS AND RF BOARD SERVICE POSITION

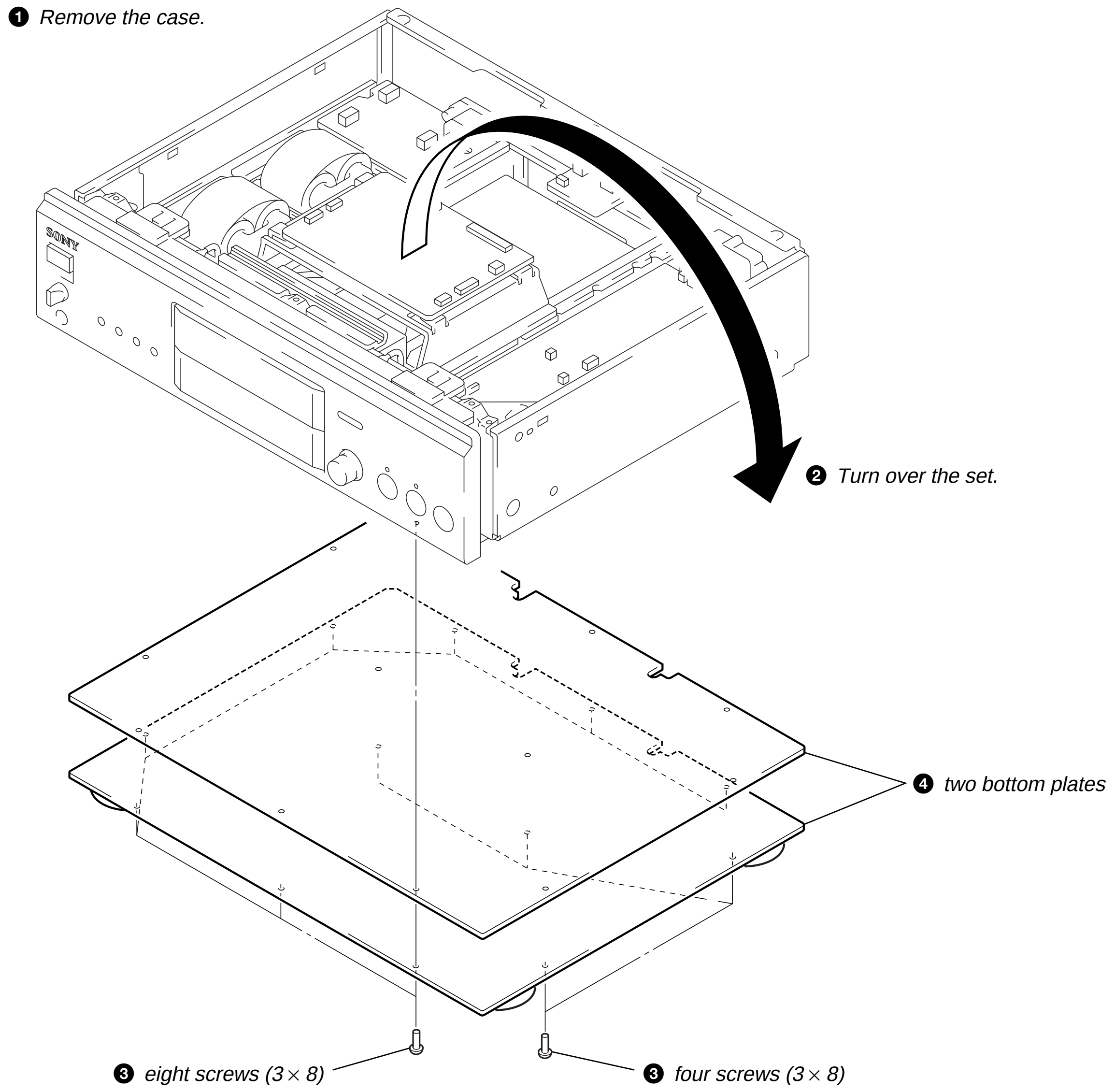


– BOTTOM VIEW –

*INSTALLATION TWO WIRES (FLAT TYPE) (25/35 CORE)*

*Note: When the wire (flat type) (35 core) is disconnected from the RF board, then it is again connected, disconnect the wire (flat type) (25 core) once, and reconnect the wire (flat type) (35 core) first.*

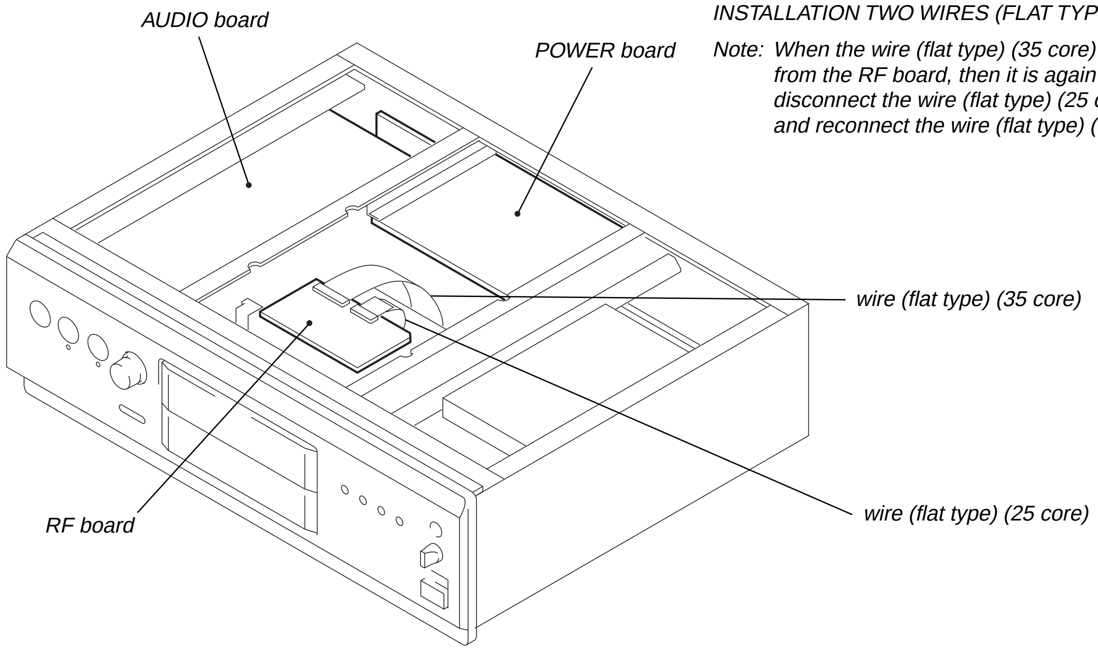

## OPTICAL PICK-UP SERVICE POSITION

Place the insulator on the MAIN board, then install the base unit (DVBU4) on it as shown in the figure.

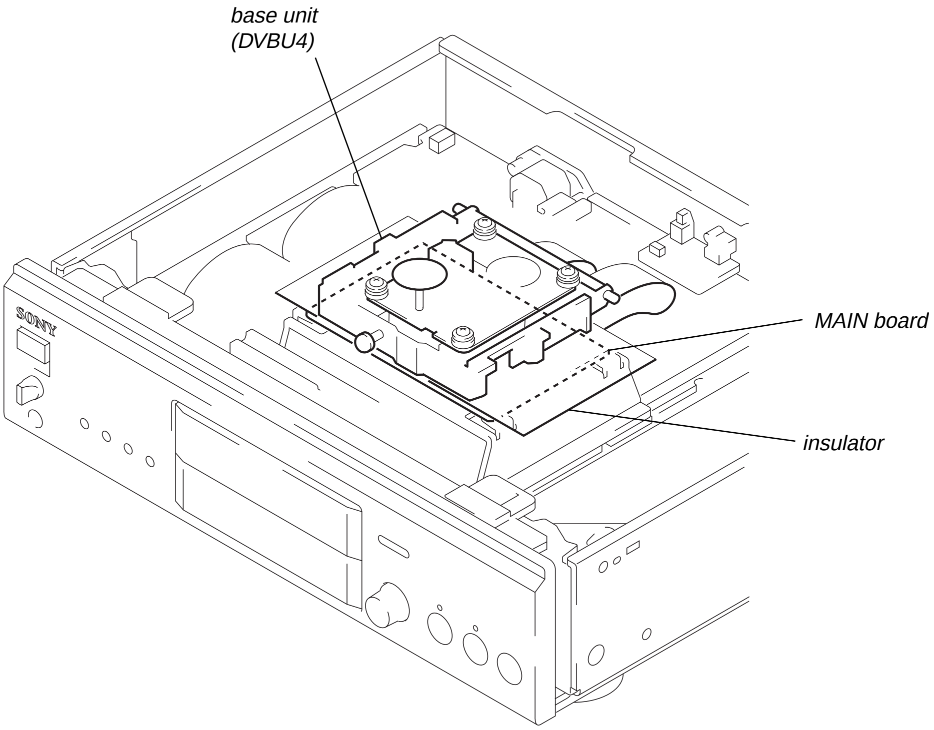


## MAIN BOARD SERVICE POSITION

In checking the MAIN board, prepare jig (extension cable J-2501-155-A: 1.00 mm Pitch, 9 cores, Length 300 mm).

**Note:** Be sure to ground the MAIN board with a lead wire when checking it.

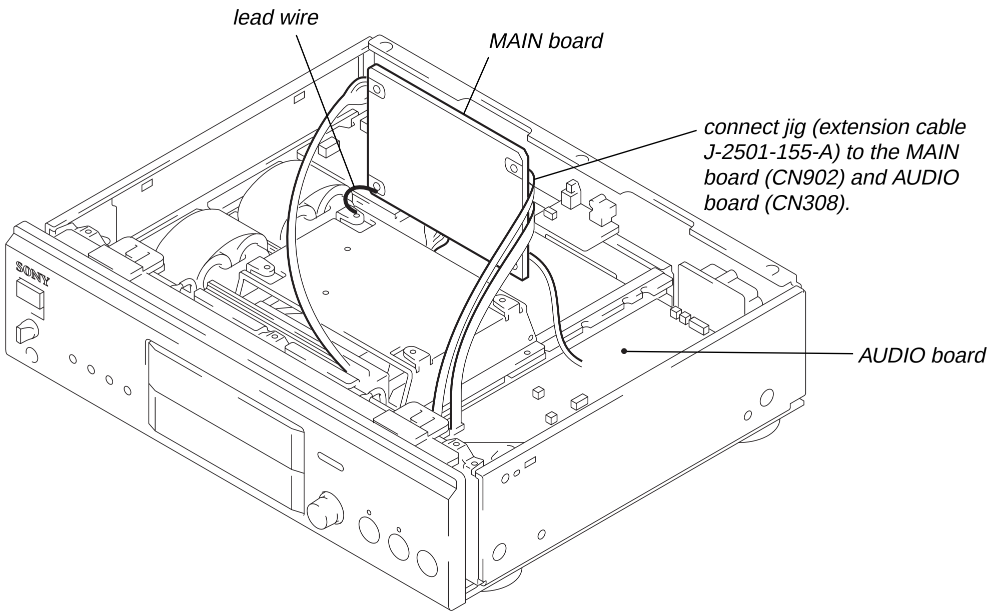

This section is extracted from instruction manual.

# Front Panel Parts Descriptions

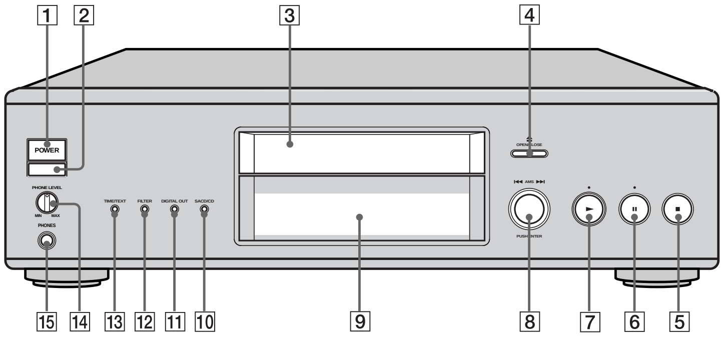


1 **POWER switch (11)**
Press to turn on/off the player.

2 **Remote sensor ▣ (4)**

3 **Disc tray (11)**
Press ⏏ OPEN/CLOSE to open/close the disc tray.

4 **⏏ OPEN/CLOSE button (11)**
Press to open/close the disc tray.

5 **■ button (12)**
Press to stop play.

6 **❚❚ button (12)**
Press to pause play.

**❚❚ indicator**
Lights up during pause.

7 **► button (11)**
Press to start play.

**► indicator**
Lights up during playback.

8 **|◁◁AMS▷▷| dial (AMS: Automatic Music Senser) (11)**
When you turn the |◁◁AMS▷▷| dial counterclockwise by one click, you go back to the preceding track; when you turn the |◁◁AMS▷▷| dial clockwise by one click, you go to the succeeding track.

9 **Display window (12)**
Shows various information.

10 **SACD/CD button (with an LED) (11)**
Each time you press the button while the Hybrid disc (page 11) is loaded, the layer changes between the HD layer (the LED turns on) and CD layer (the LED turns off).

11 **DIGITAL OUT button (with an LED) (5)**
Press when a component is connected to the DIGITAL (CD) OUT connectors. Each time you press the button, the DIGITAL OUT mode changes between ON (the digital signals can be output/the LED turns on) and OFF (the digital signals cannot be output/the LED turns off). The digital signal can be output only when you play a CD.

12 **FILTER button (18)**
Press to select a digital filter type when playing a CD.

13 **TIME/TEXT button (12)**
Each time you press the button, the playing time of the track, the total remaining time on the disc, or TEXT information appears in the display.

14 **PHONE LEVEL**
Adjust the headphones volume.

15 **PHONES**
Connect the headphones.

# Rear Panel Parts Descriptions

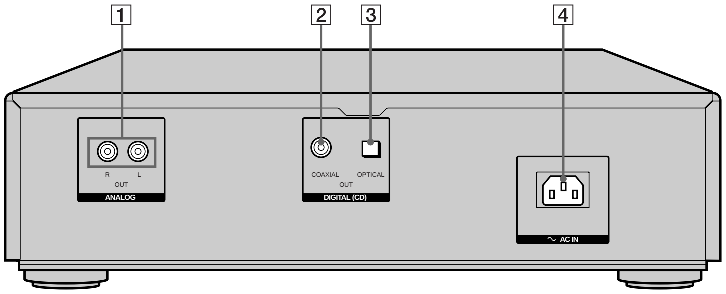


1 **ANALOG OUT jacks (5)**
Connect to an audio component using the audio connecting cord.

2 **DIGITAL (CD) OUT COAXIAL connector (5)**
Connect to an audio component using the coaxial digital cable.

3 **DIGITAL (CD) OUT OPTICAL connector (5)**
Connect to an audio component using an optical digital cable.

4 **AC IN terminal (5)**
Connect the mains lead.

**Note**
Only the audio signals of the CD can be output from the DIGITAL (CD) OUT connectors shown in 2 and 3. Those of the Super Audio CD cannot be output through DIGITAL (CD) OUT connectors.

# Remote Parts Descriptions

1 **CONTINUE button (17)**
Press to resume normal play from Shuffle Play or Programme Play.

**SHUFFLE button (17)**
Press to select Shuffle Play.

**PROGRAM button (17)**
Press to select Programme Play.

2 **SACD/CD button (11)**
Each time you press the button while the Hybrid disc (page 11) is loaded, the layer changes between an HD layer (the SACD/CD LED turns on) and CD layer (the SACD/CD LED turns off).

3 **DISPLAY MODE button (13)**
Press to turn off the information.

4 **Number buttons (14)**
Press to enter the track numbers.

5 **>10 button (14)**
Press to locate a track numbered over 10.

6 **REPEAT button (16)**
Press repeatedly to play all tracks or only one track on the disc.

7 **▷ button (11)**
Press to start play.

**II button (12)**
Press to pause play.

**■ button (12)**
Press to stop play.

8 **AMS ⏮/⏭ (AMS: Automatic Music Sensor) buttons (14)**
Press to locate a specific track.

9 **◀◀/▶▶ buttons (15)**
Press to locate a portion you want to play within a track.

10 **INDEX ↼/⇀ buttons (15)**
Press to locate a specific point marked with an index signal when you play a disc that has index signals.

11 **TIME/TEXT button (12)**
Each time you press the button, the playing time of the track, the total remaining time on the disc, or TEXT information appears in the display.

12 **LANGUAGE button (14)**
Press to change the displayed language if the TEXT disc has several languages.

13 **DIGITAL FILTER button (18)**
Press to select a digital filter type when playing a CD.

14 **CLEAR button (17)**
Press to delete a programmed track number.

15 **CHECK button (18)**
Press to check the programmed order.

16 **A↔B button (16)**
Press to select Repeat A-B Play.

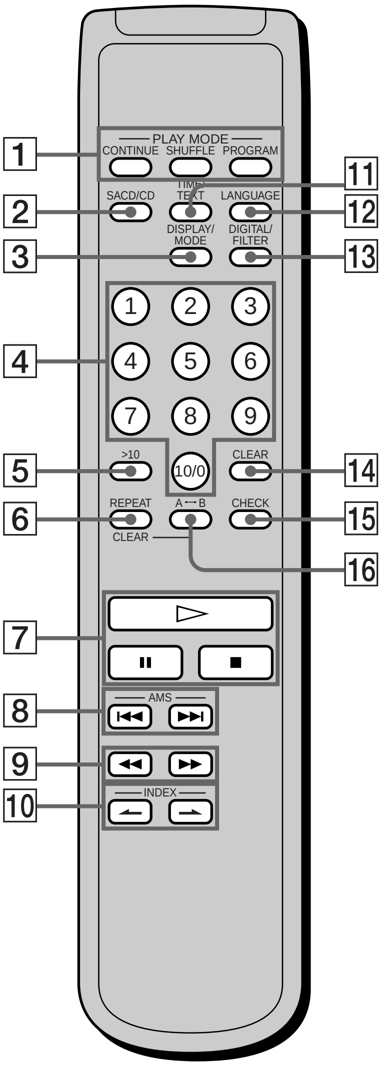

# Compatible Disc Types

You can play the following discs with this player. Depending on the type of disc to be played, select the appropriate indicator by pressing SACD/CD on the front panel of the player or on the remote (pages 11).

## Super Audio CD (single layer disc)

This disc consists of a single HD layer*.
Press SACD/CD repeatedly so that "SUPER AUDIO CD" appears in the display (the SACD/CD LED turns on).
*High density signal layer for the Super Audio CD

## Super Audio CD (dual layer disc)

This disc consists of dual HD layers and is capable of extended play over long periods.
Press SACD/CD repeatedly so that "SUPER AUDIO CD" appears in the display (the SACD/CD LED turns on).
Also, as the dual layer disc consists of dual HD layers on one side only, it is not necessary to turn the disc over.

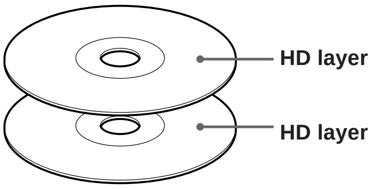


## Conventional CD

This disc is the standard format.
Press SACD/CD repeatedly so that "CD" appears in the display (the SACD/CD LED turns off).

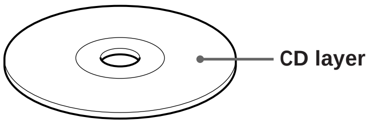


## Super Audio CD + CD (Hybrid disc)

This disc consists of an HD layer and a CD layer. Press SACD/CD to select the layer you want to listen to. Also, as the dual layers are on one side, it is not necessary to turn the disc over. You can play the CD layer using a conventional CD player.

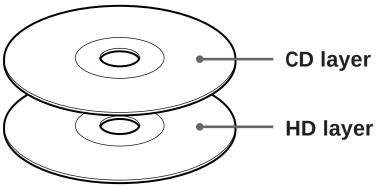


### Incompatible Discs

This player cannot play the following discs. If you try to play them, the error message "TOC Error" or "NO DISC" will appear or there will be no sound.
• CD-ROM
• DVD, etc.

# SECTION 3
# DISASSEMBLY

• This set can be disassembled in the order shown below.

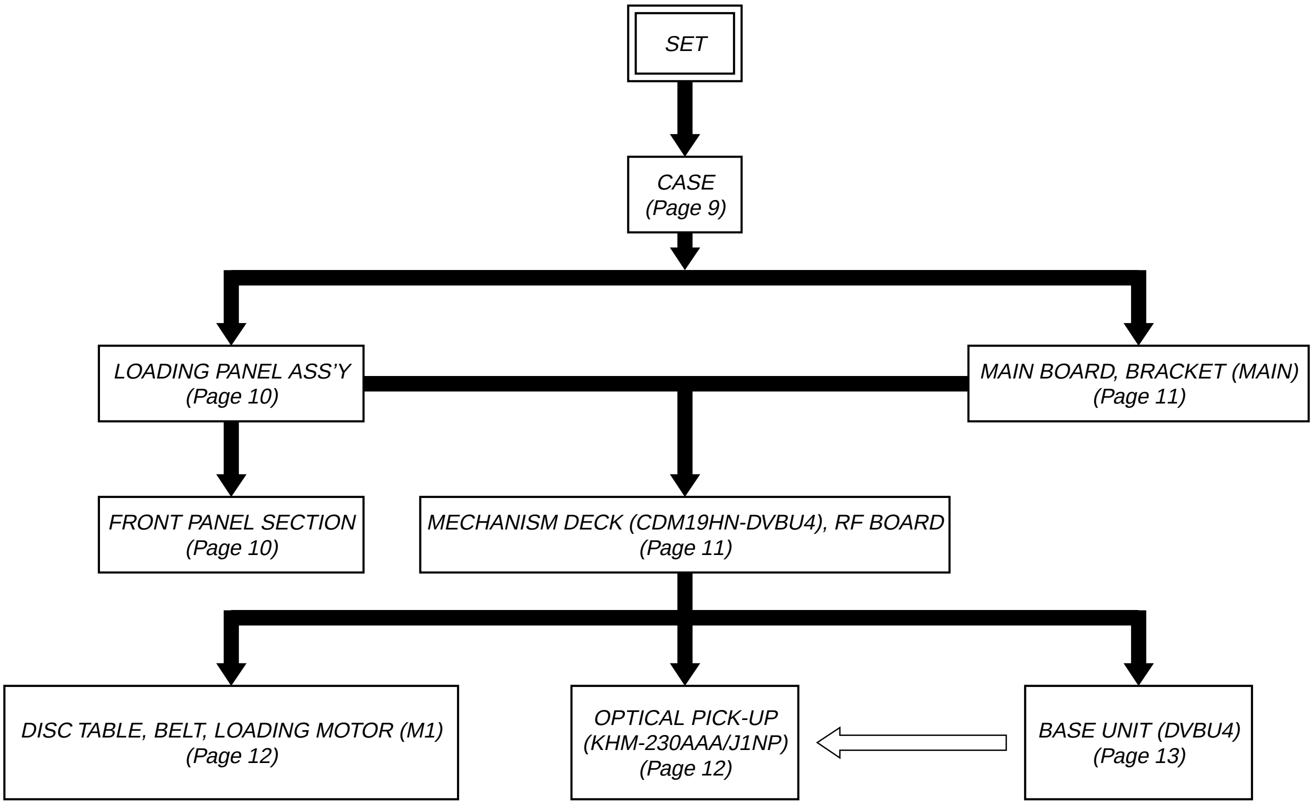


*After removing the base unit (DVBU4), the optical pick-up (KHM-230AAA/J1NP) can be removed.*

**Note:** Follow the disassembly procedure in the numerical order given.

## CASE

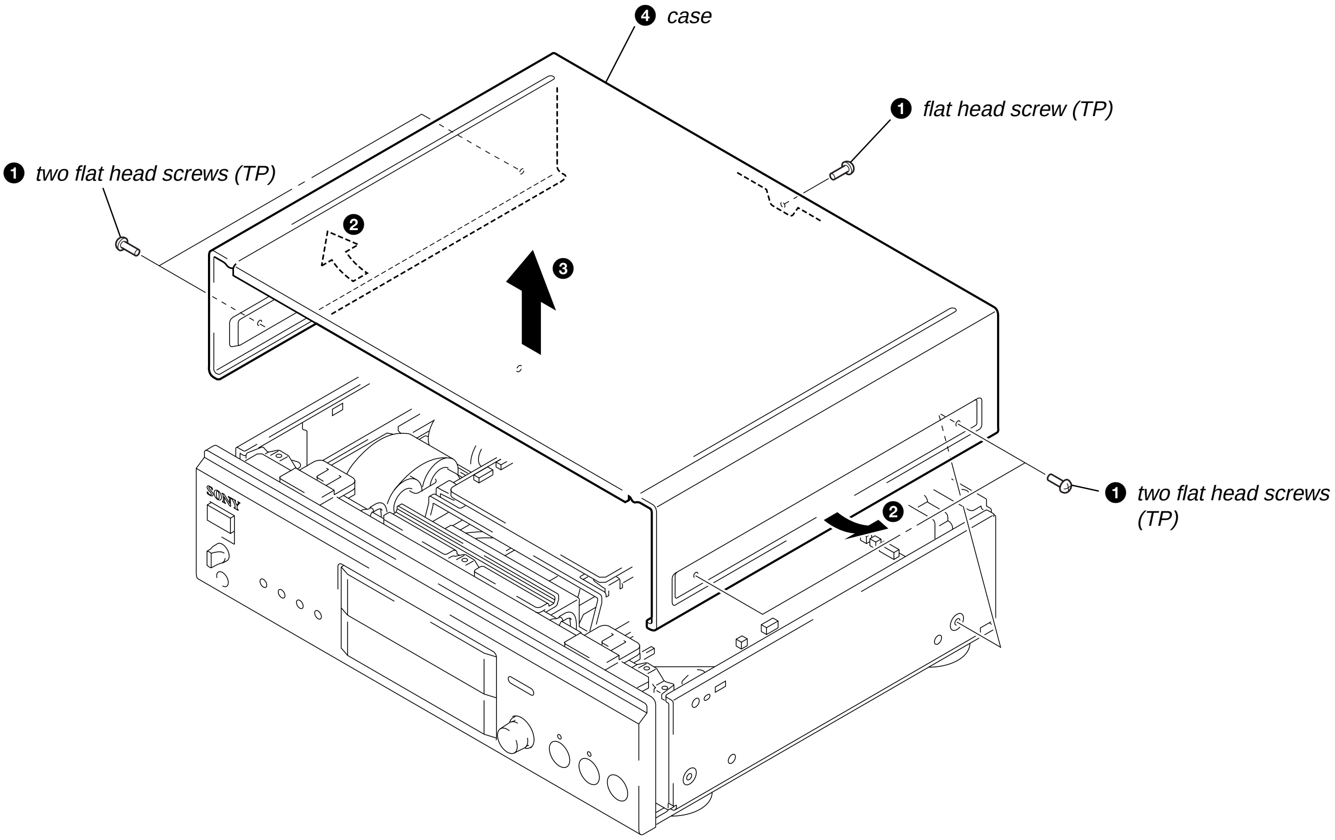

## LOADING PANEL ASSY

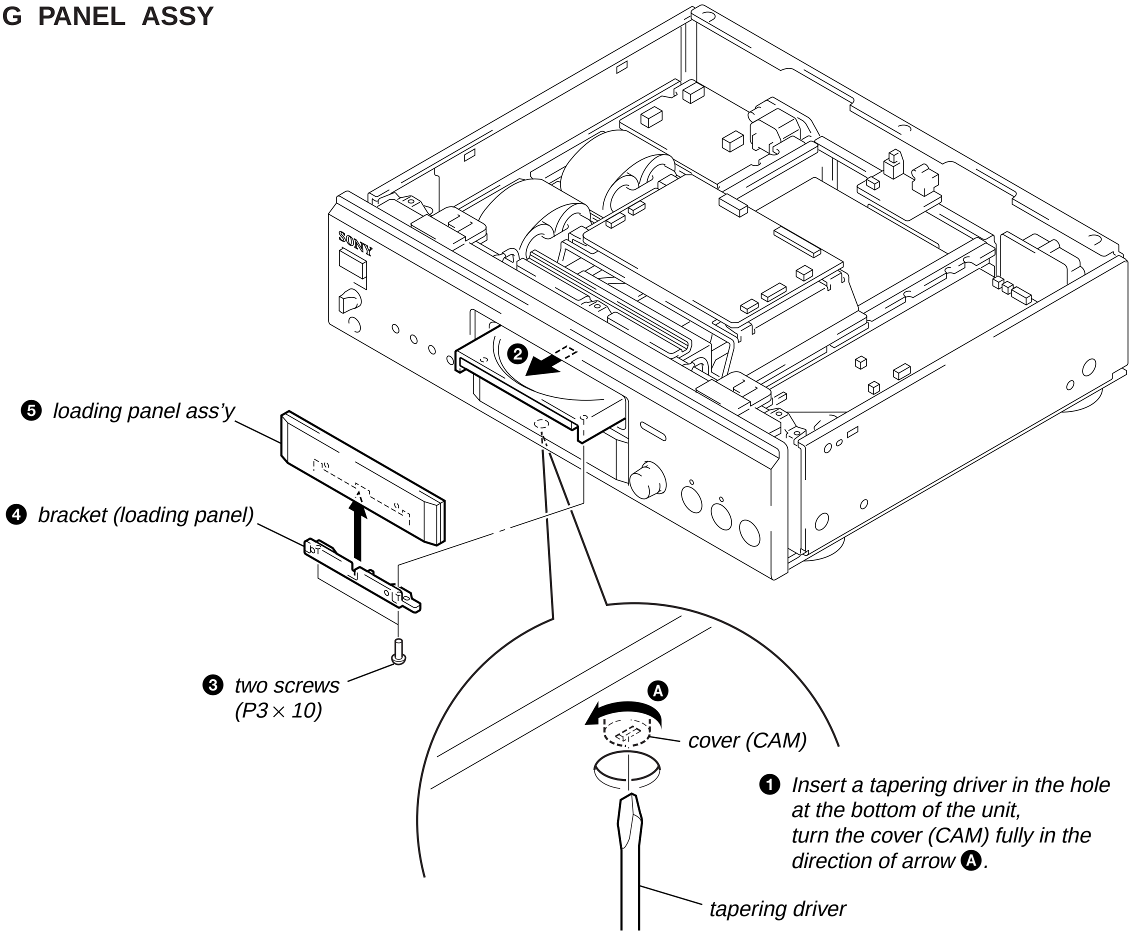


## FRONT PANEL SECTION

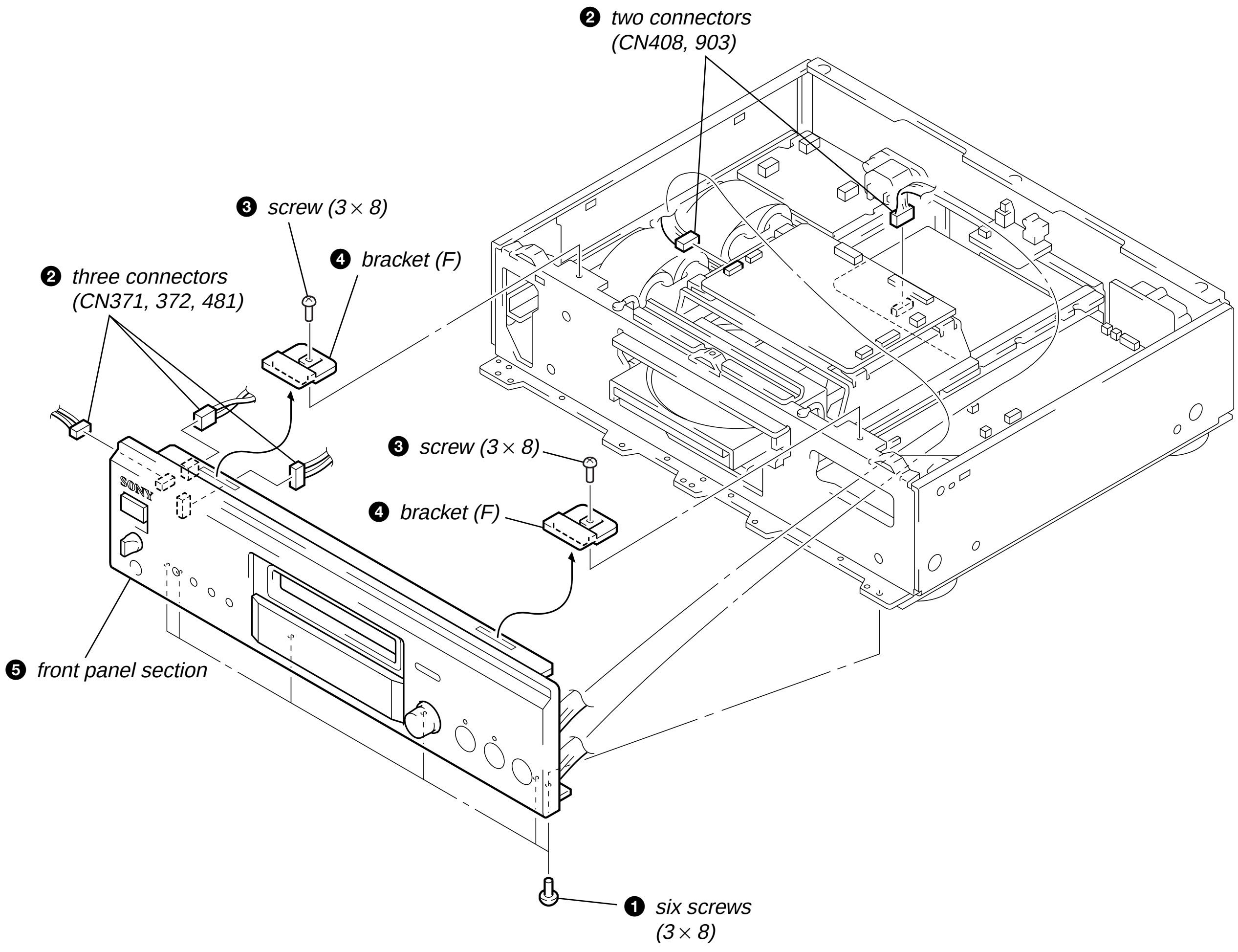

## MAIN BOARD, BRACKET (MAIN)

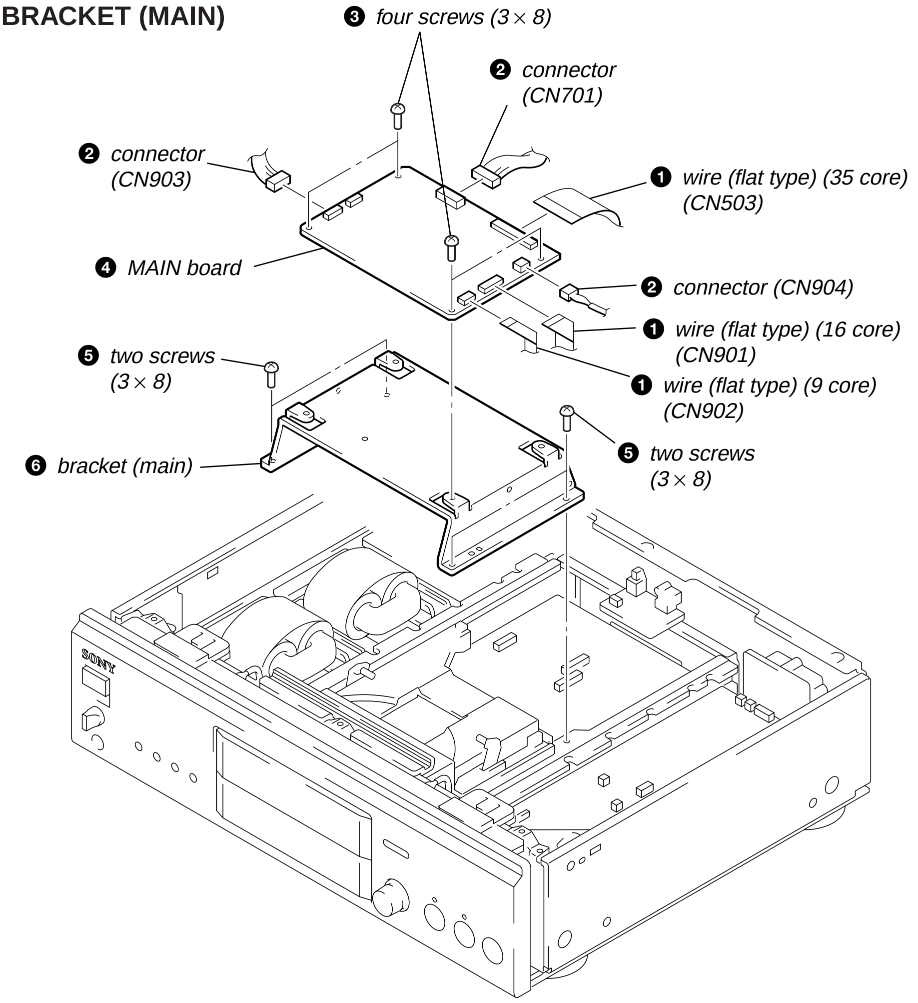


## MECHANISM DECK (CDM19HN-DVBU4), RF BOARD

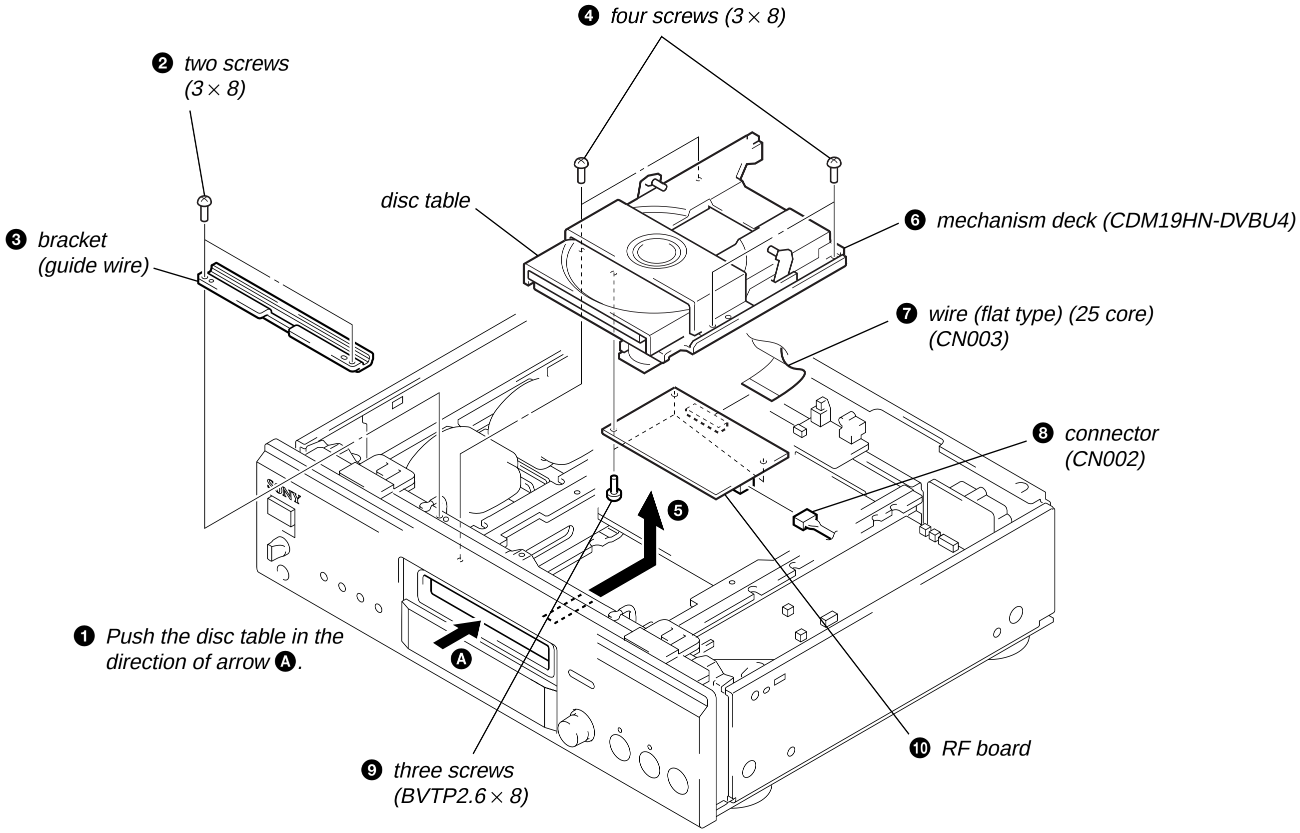

## DISC TABLE, BELT, LOADING MOTOR (M1)

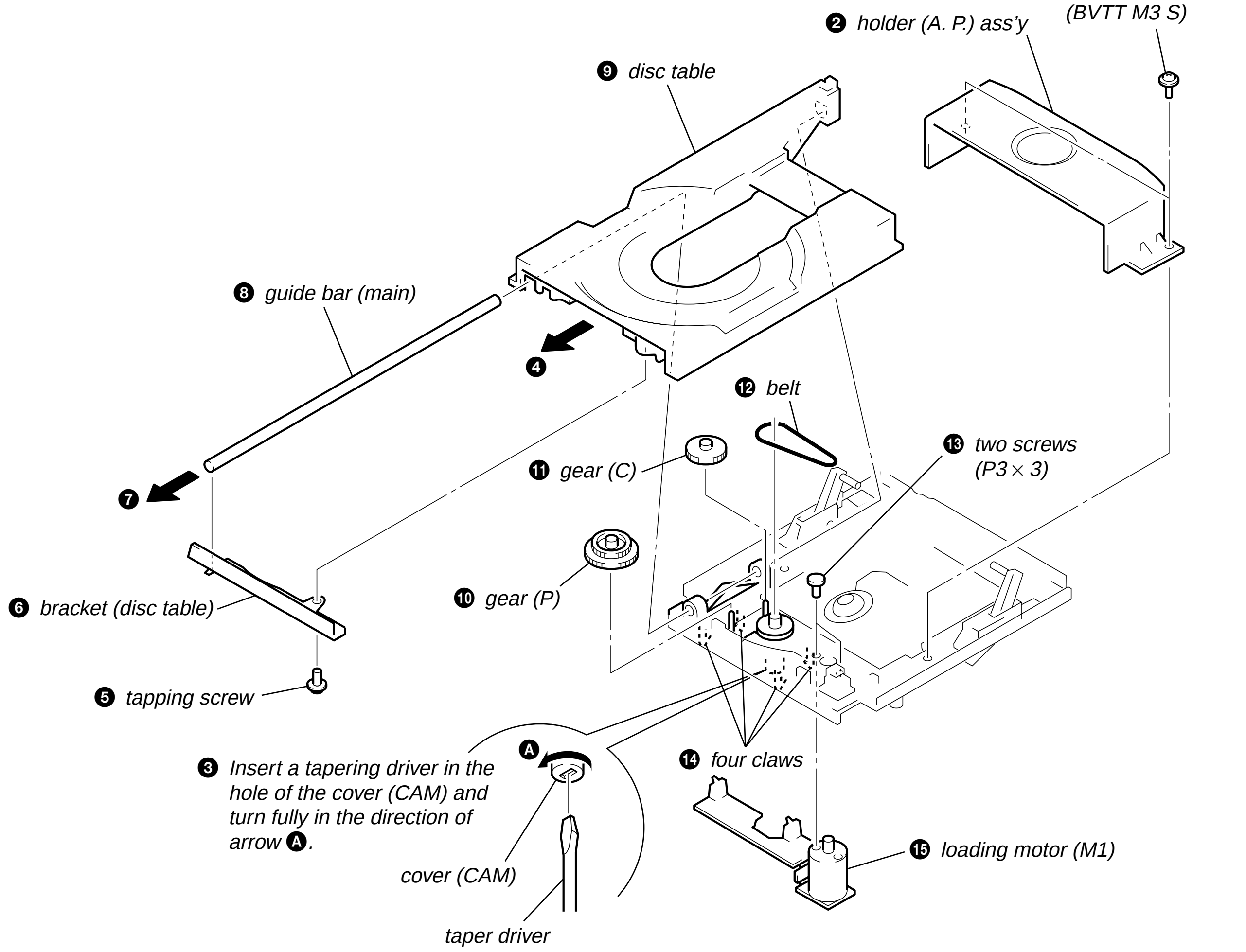


## OPTICAL PICK-UP (KHM-230AAA/J1NP)

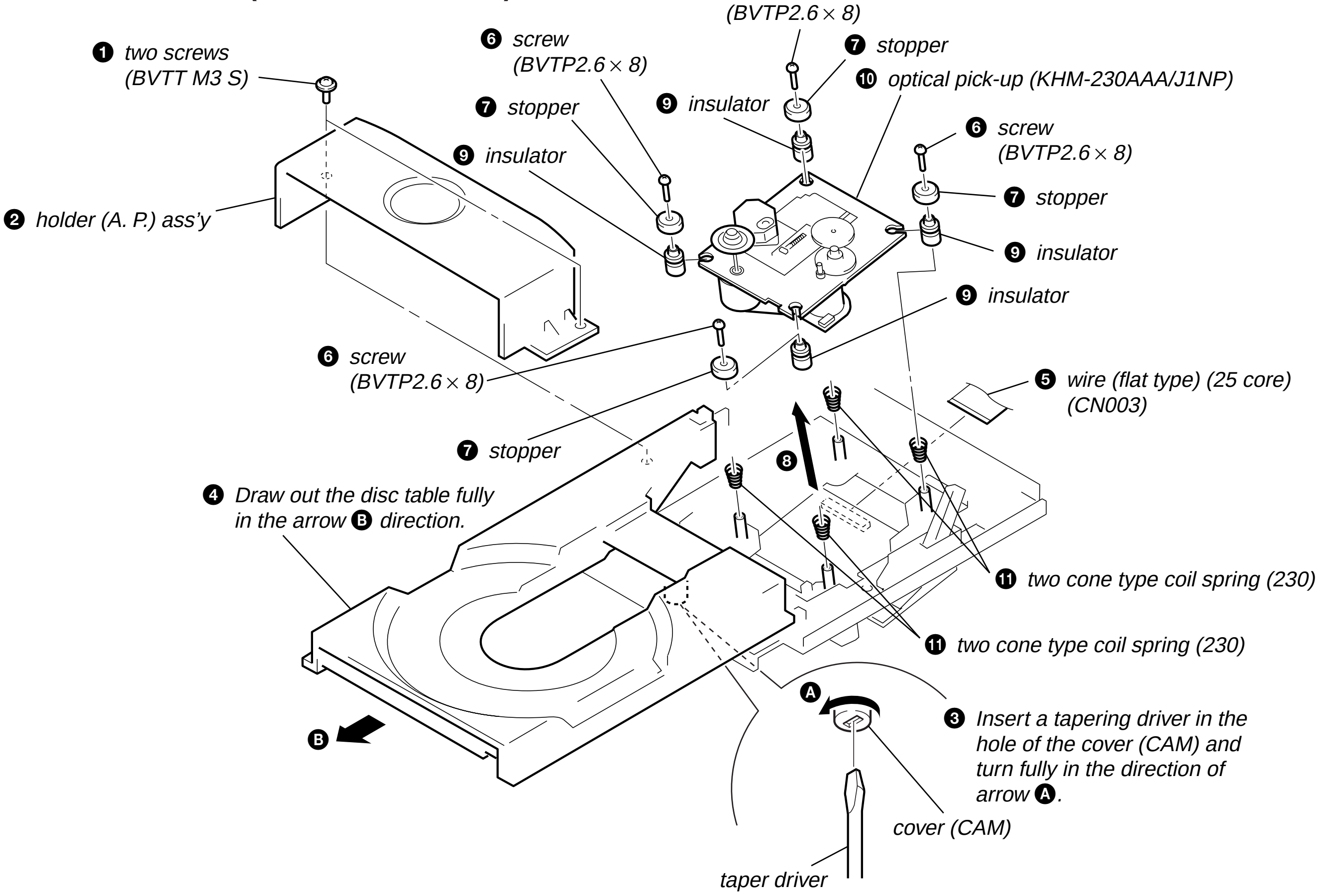

## BASE UNIT (DVBU4)

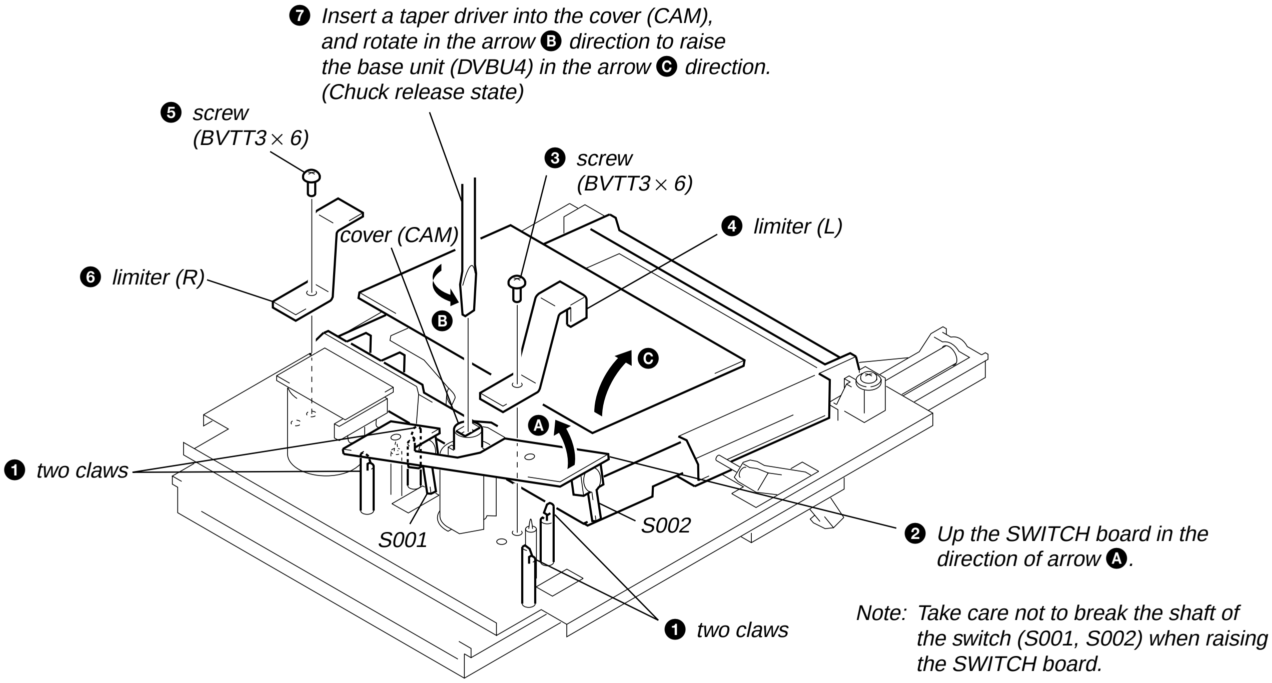


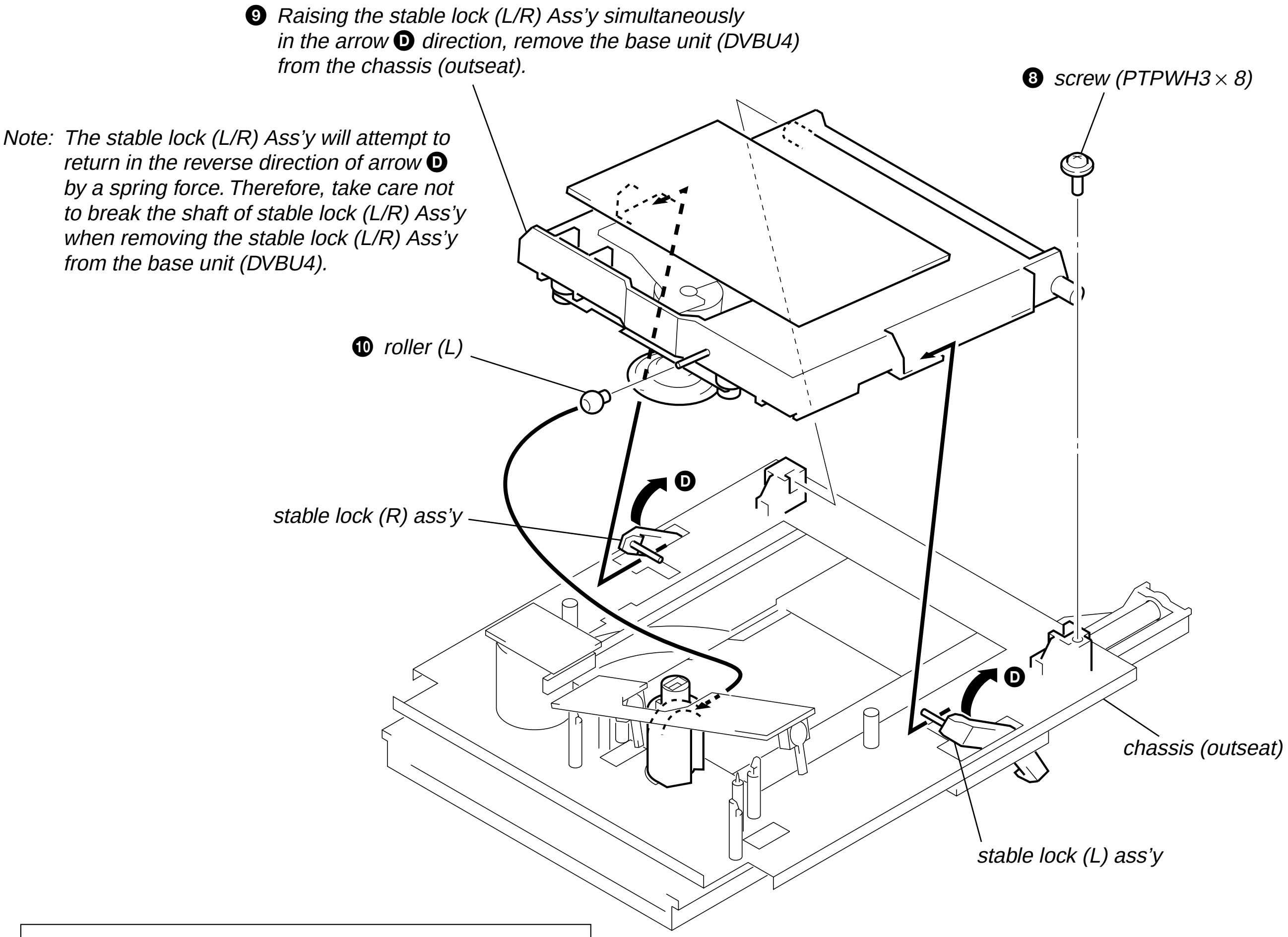


In removing the optical pick-up (KHM-230AAA/J1NP)
after removing the base unit (DVBU4),
perform the optical pick-up (KHM-230AAA/J1NP) removal
procedure after step 5 on page 12.

## *MEMO*

# SECTION 4
# DIAGRAMS

## 4-1. NOTE FOR PRINTED WIRING BOARDS AND SCHEMATIC DIAGRAMS

**Note on Printed Wiring Board:**
- o——— : parts extracted from the component side.
- ——— : parts extracted from the conductor side.
- ░░░ : Pattern from the side which enables seeing.

(The other layers' patterns are not indicated.)

| Caution: | |
|---|---|
| Pattern face side: (Conductor Side) | Parts on the pattern face side seen from the pattern face are indicated. |
| Parts face side: (Component Side) | Parts on the parts face side seen from the parts face are indicated. |

- Main board is multi-layer printed board. However, the patterns of intermediate-layer have not been included in diagram.
- Indication of transistor

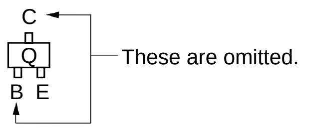


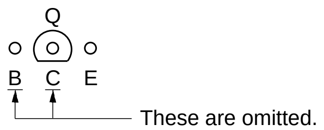


**Note on Schematic Diagram:**
- All capacitors are in μF unless otherwise noted. pF: μμF 50 WV or less are not indicated except for electrolytics and tantalums.
- All resistors are in Ω and 1/4 W or less unless otherwise specified.
- △ : internal component.
- ─WW─ : fusible resistor.
- ▭ : panel designation.

**Note:** The components identified by mark ⚠ or dotted line with mark ⚠ are critical for safety.
Replace only with part number specified.

- B+ : B+ Line.
- B– : B– Line.
- Voltages and waveforms are dc with respect to ground under no-signal conditions.
  no mark : CD PLAY (ANALOG OUT)
  ( ) : SACD PLAY
  《 》 : CD PLAY (DIGITAL OUT)
- Voltages are taken with a VOM (Input impedance 10 MΩ). Voltage variations may be noted due to normal production tolerances.
- Waveforms are taken with a oscilloscope. Voltage variations may be noted due to normal production tolerances.
- Circled numbers refer to waveforms.
- Signal path.
  ⇨ : SACD PLAY
  ⇨⇨ : CD PLAY (ANALOG OUT)
  ⇨⇨⇨ : CD PLAY (DIGITAL OUT)

- **Circuit Boards Location**

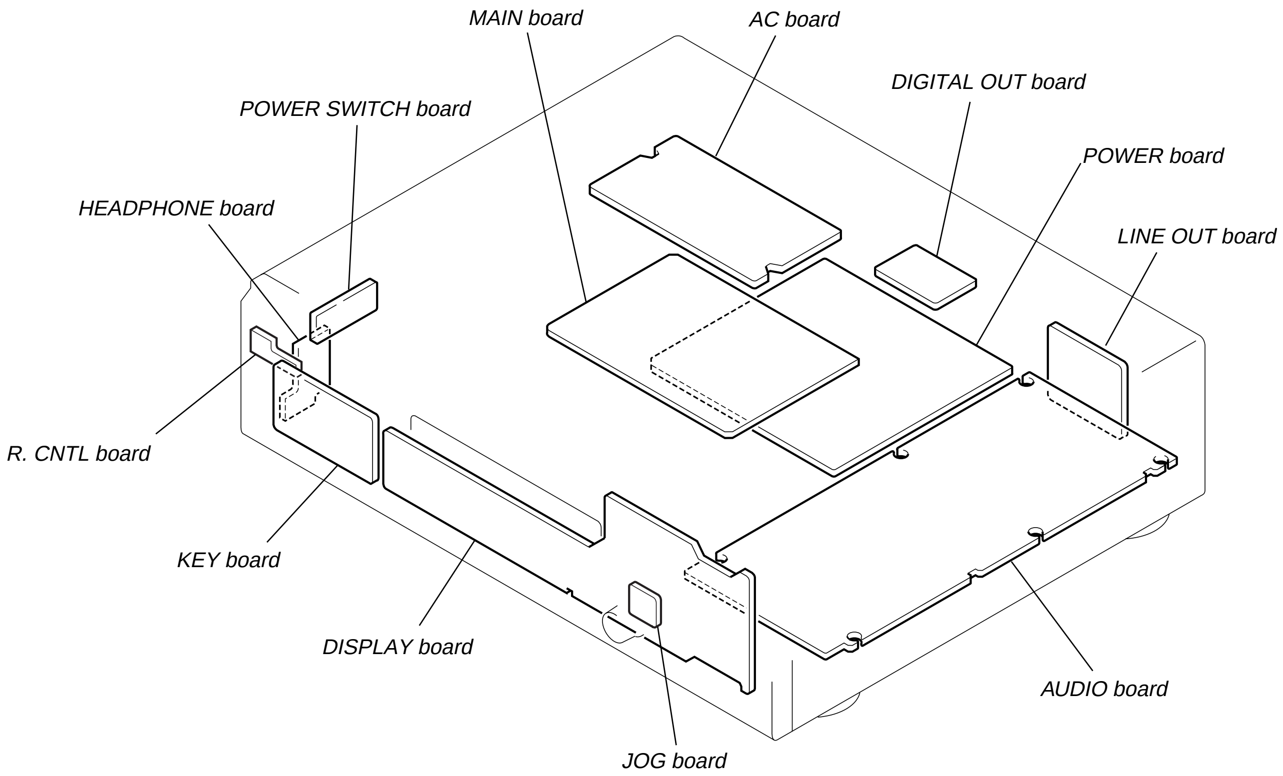


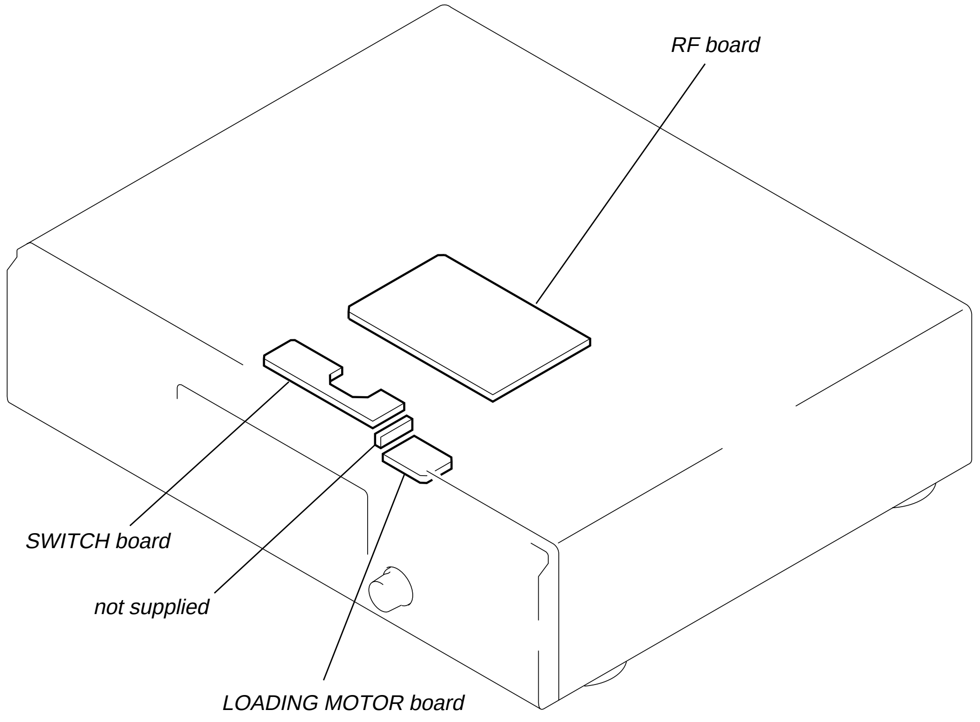

## 4-2. PRINTED WIRING BOARDS – RF/SWITCH/LOADING MOTOR Boards –

• See page 15 for Circuit Boards Location.

- **Semiconductor Location**

| Ref. No. | Location |
|---|---|
| D001 | B-5 |
| D002 | B-4 |
| IC001 | D-4 |
| IC004 | F-3 |
| IC081 | C-1 |
| Q001 | B-4 |
| Q002 | C-3 |
| Q003 | B-3 |
| Q005 | B-4 |

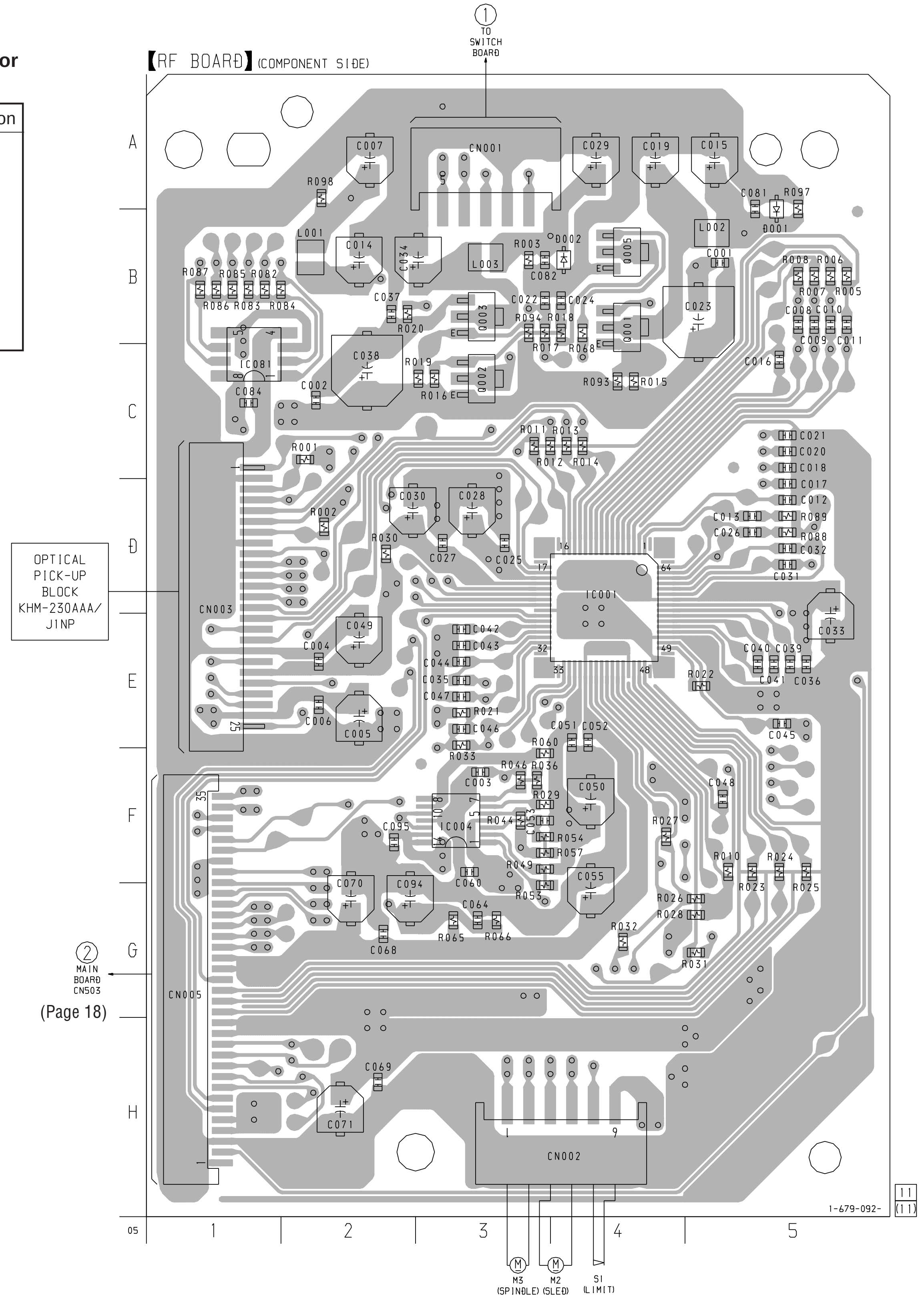


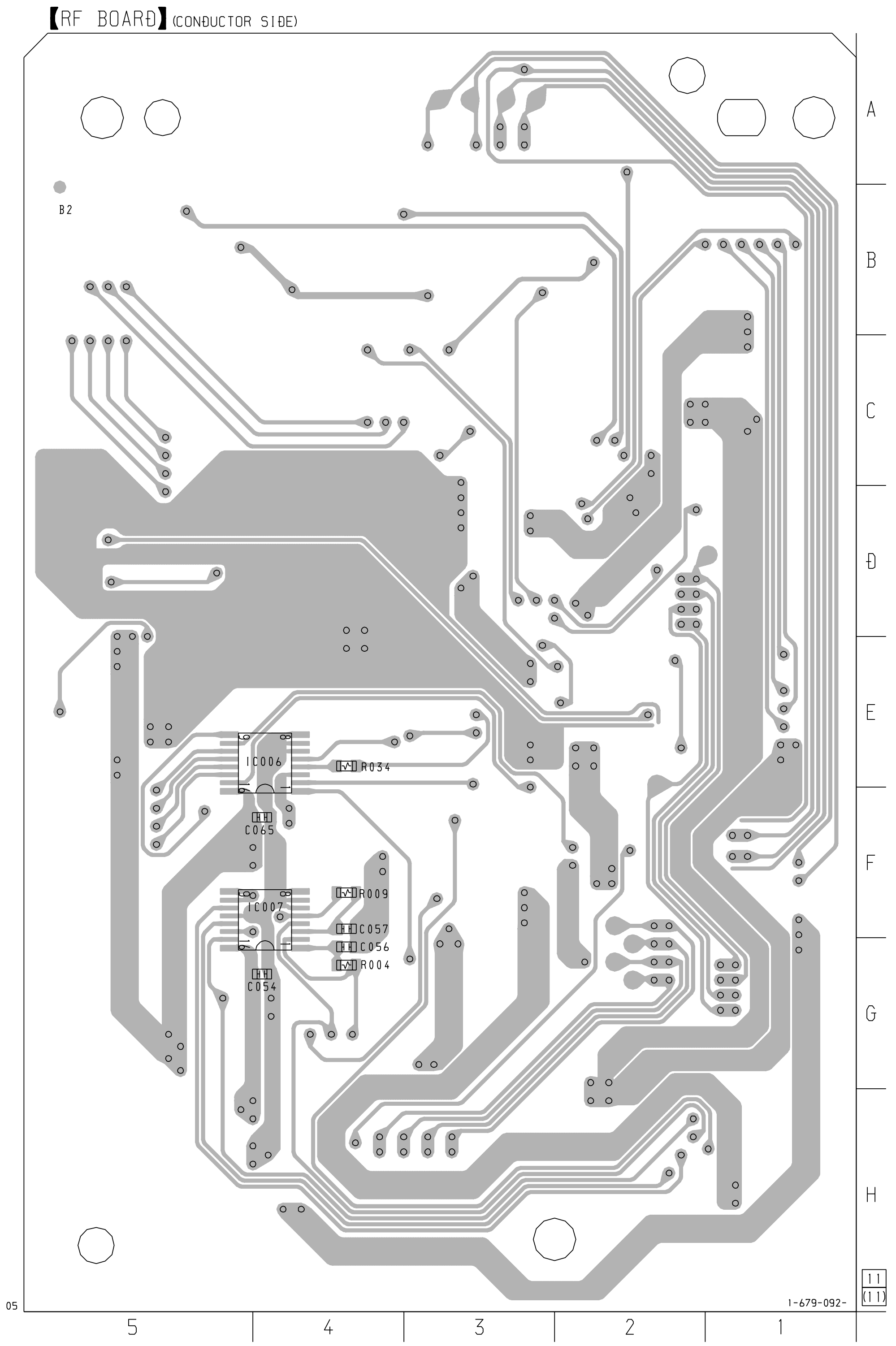


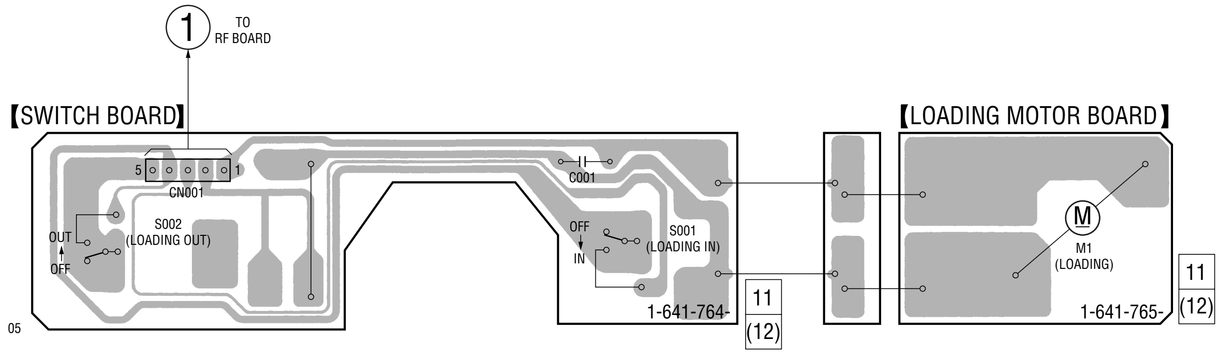


There are a few cases that the part isn't mounted in model is printed on diagrams.

## 4-3. SCHEMATIC DIAGRAM – RF/SWITCH/LOADING MOTOR Boards –

• See page 38 for Waveforms. • See page 40 for IC Block Diagram.

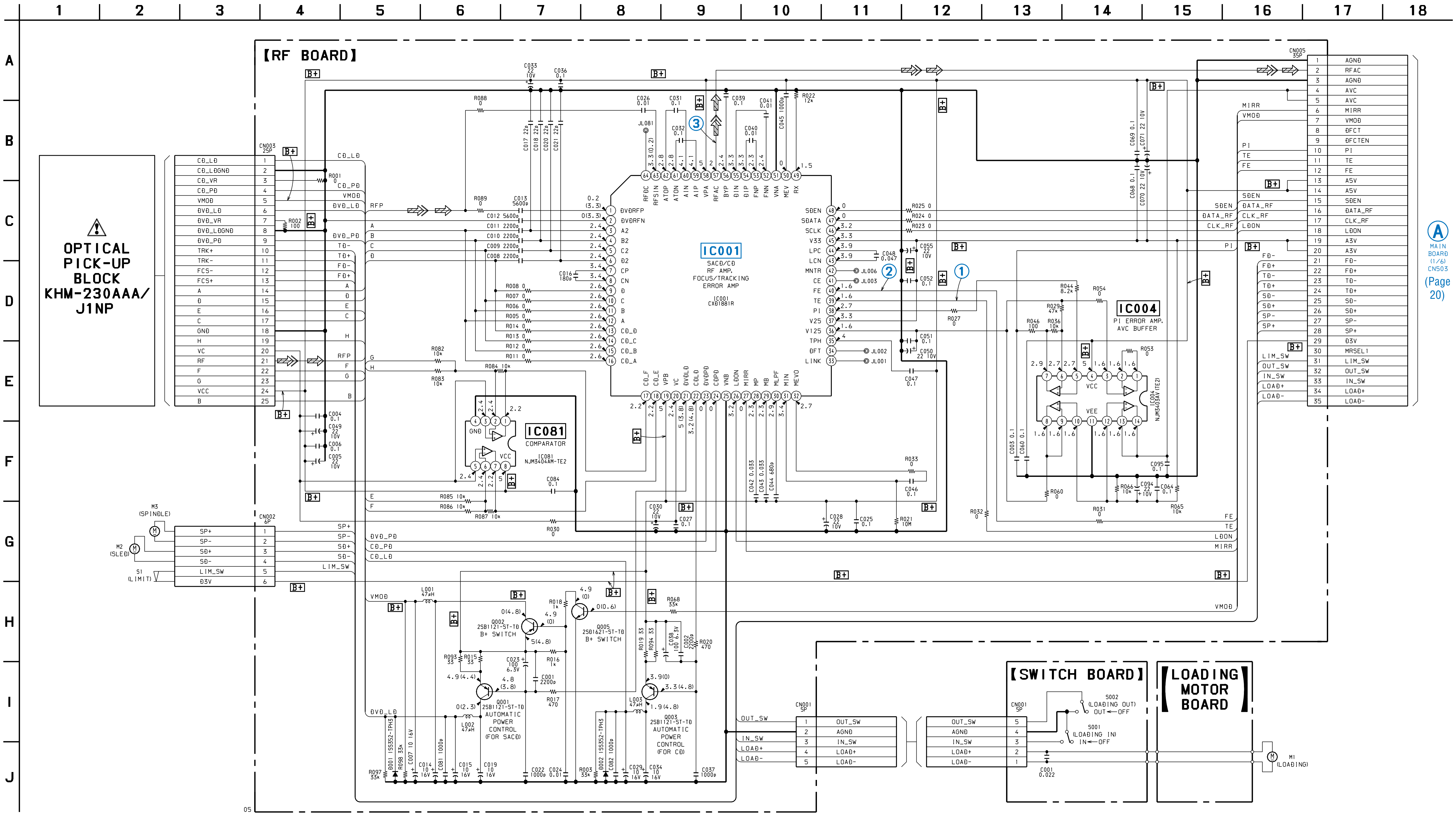


The components identified by mark ⚠ or dotted line with mark ⚠ are critical for safety.
Replace only with part number specified.

## 4-4. PRINTED WIRING BOARD – MAIN Board (Component Side) –

• See page 15 for Circuit Boards Location.

• **Semiconductor Location**

| Ref. No. | Location |
|---|---|
| D903 | A-11 |
| IC509 | C-6 |
| IC701 | D-10 |
| IC704 | B-9 |
| IC801 | G-10 |
| IC803 | F-8 |
| IC804 | F-8 |
| IC901 | G-3 |
| IC902 | G-6 |
| IC905 | F-5 |

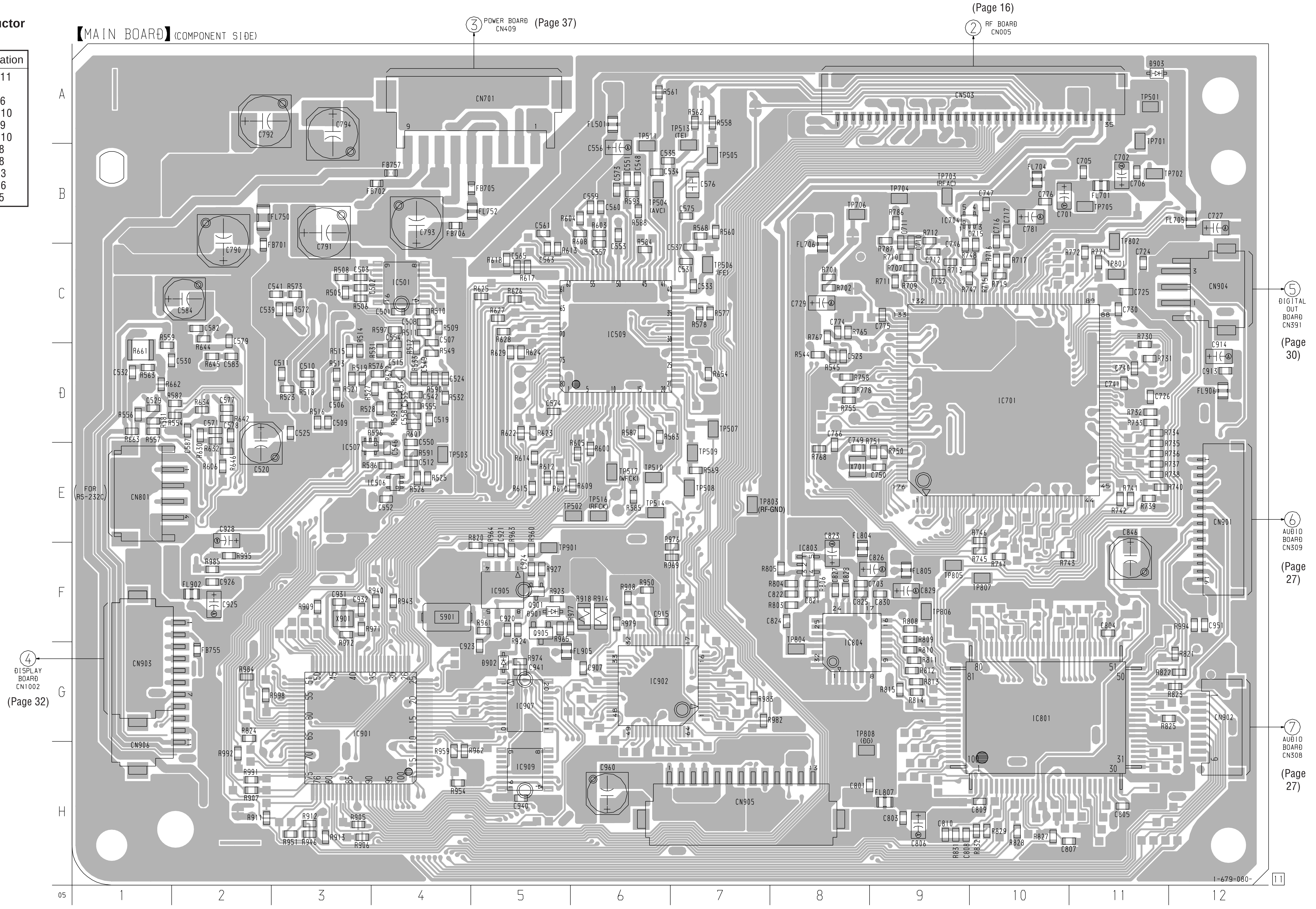


There are a few cases that the part isn't mounted in model is printed on diagrams.

## 4-5. PRINTED WIRING BOARD – MAIN Board (Conductor Side) –

• See page 15 for Circuit Boards Location.

【MAIN BOARD】(CONDUCTOR SIDE)

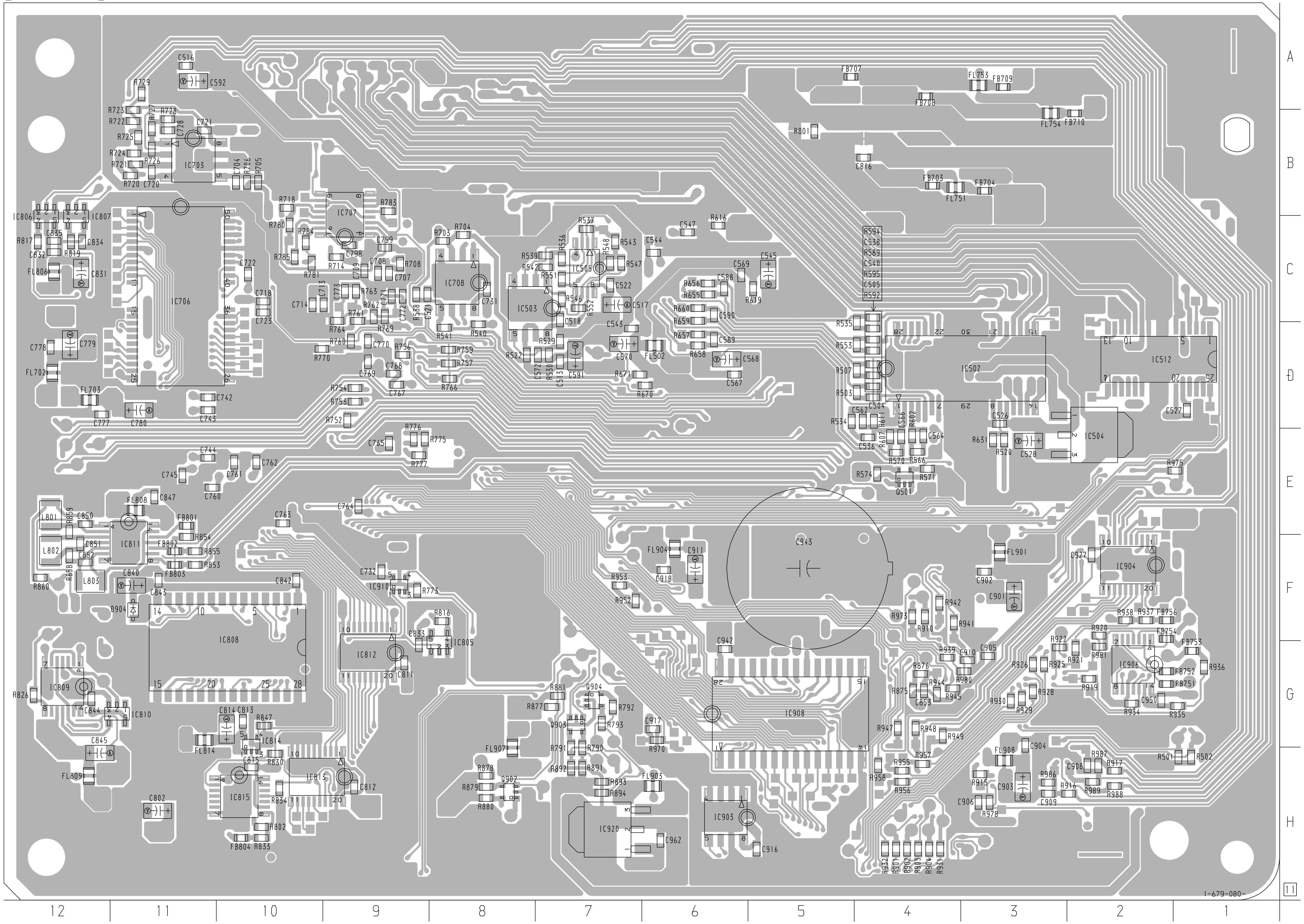


• **Semiconductor Location**

| Ref. No. | Location |
|---|---|
| D904 | F-11 |
| IC502 | D-3 |
| IC503 | C-8 |
| IC504 | E-2 |
| IC512 | D-2 |
| IC703 | B-11 |
| IC706 | C-11 |
| IC708 | C-8 |
| IC805 | G-8 |
| IC806 | C-12 |
| IC807 | C-12 |
| IC808 | G-10 |
| IC809 | G-12 |
| IC810 | G-11 |
| IC811 | F-11 |
| IC812 | G-9 |
| IC813 | H-10 |
| IC814 | G-10 |
| IC815 | H-10 |
| IC903 | H-6 |
| IC904 | F-2 |
| IC906 | G-2 |
| IC910 | F-9 |

There are a few cases that the part isn't mounted in model is printed on diagrams.

4-6. SCHEMATIC DIAGRAM – MAIN Board (1/6) – • See page 38 for Waveforms. • See page 40 for IC Block Diagram.

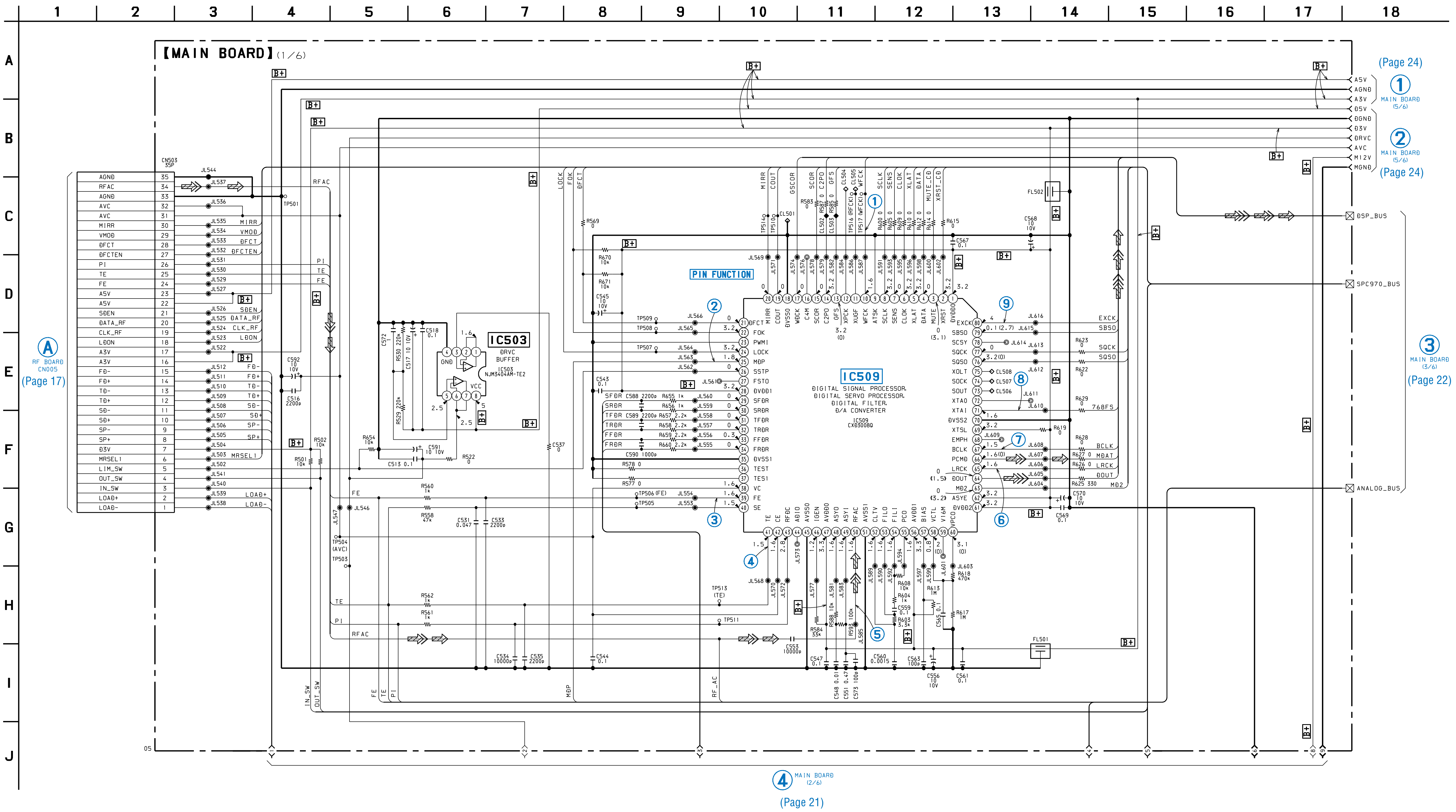

4-7. SCHEMATIC DIAGRAM – MAIN Board (2/6) – • See page 40 for IC Block Diagrams.

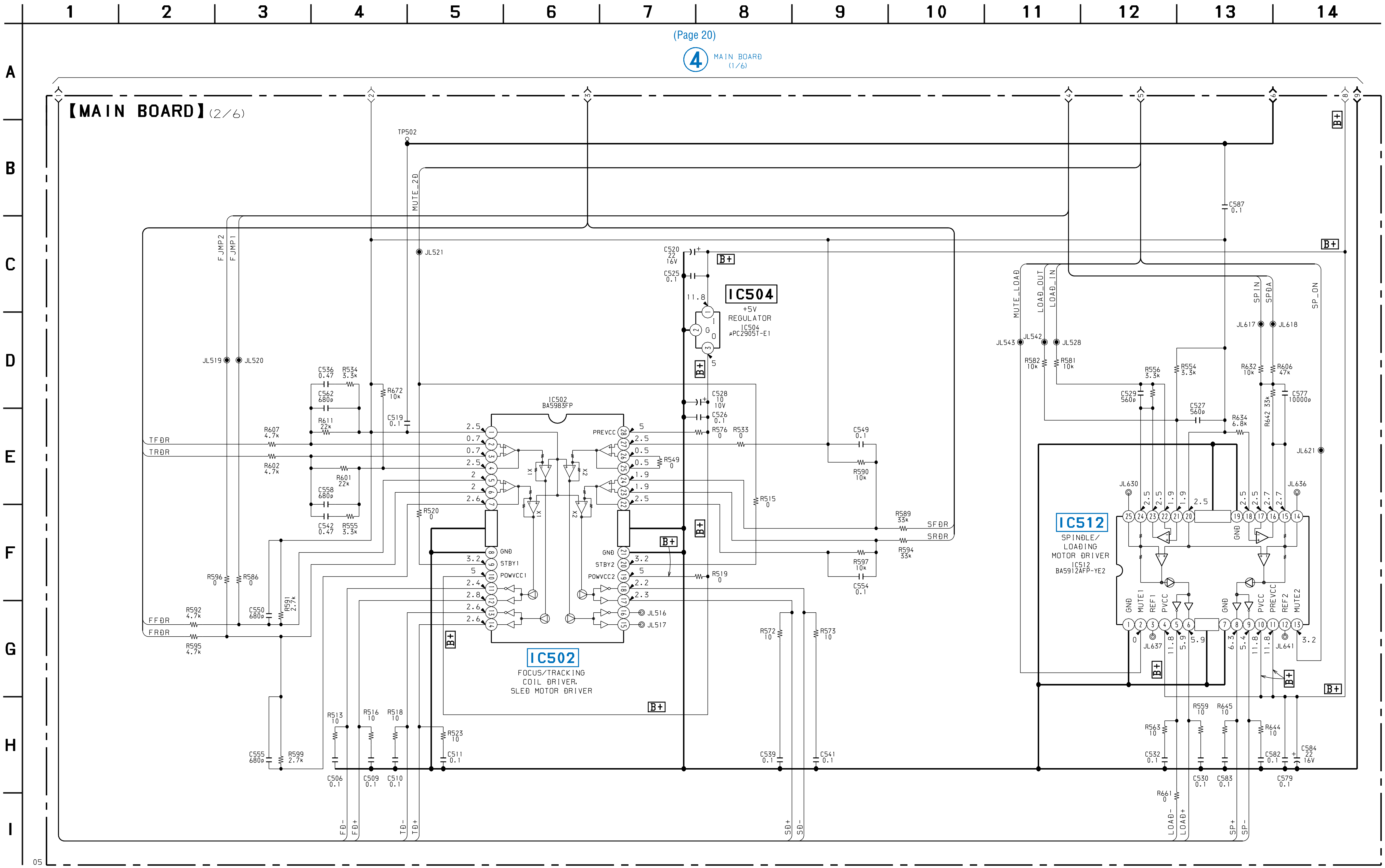

## 4-8. SCHEMATIC DIAGRAM – MAIN Board (3/6) – • See page 38 for Waveforms. • See page 40 for IC Block Diagram.

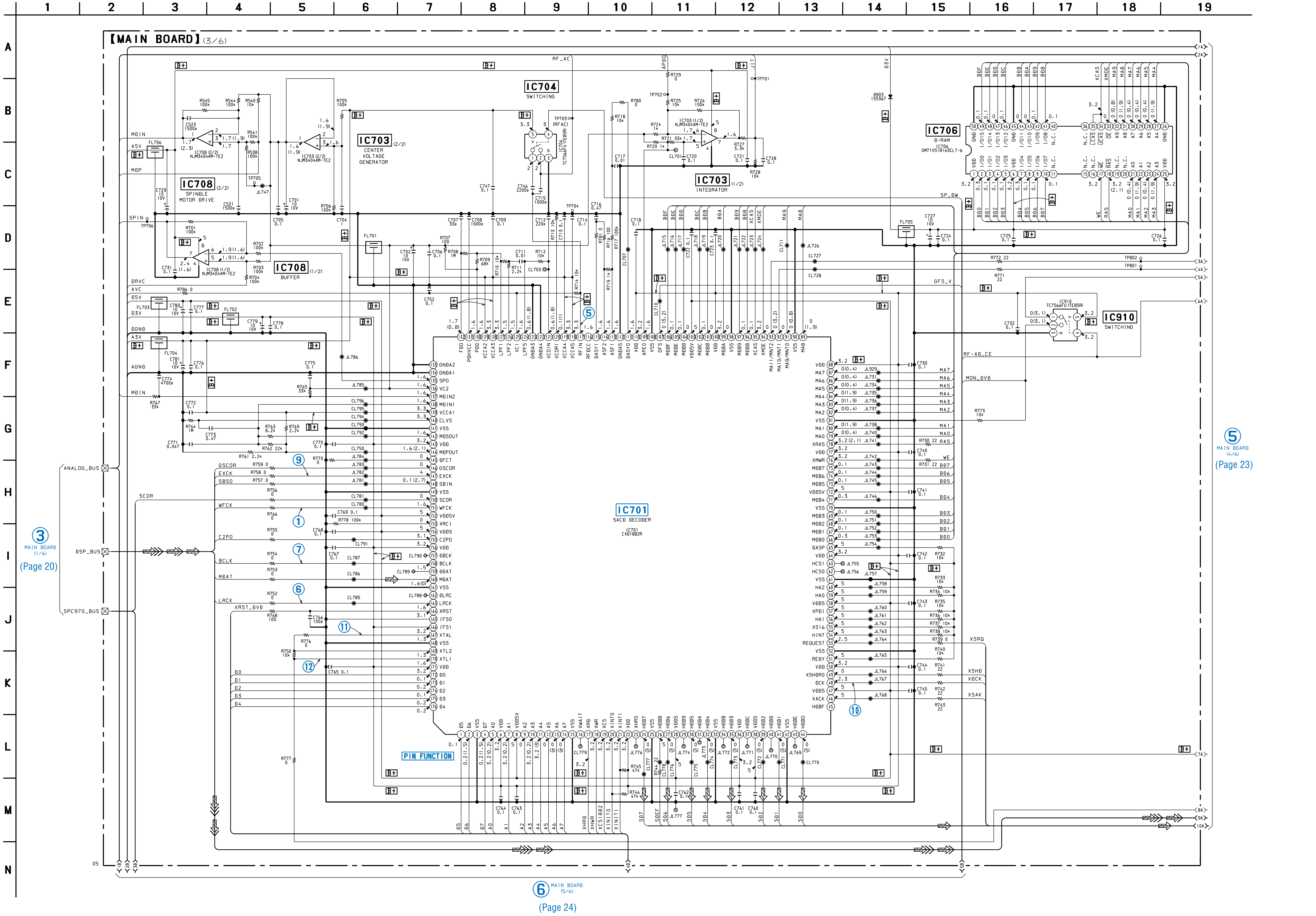

4-9. SCHEMATIC DIAGRAM – MAIN Board (4/6) – • See page 38 for Waveforms. • See page 40 for IC Block Diagrams.

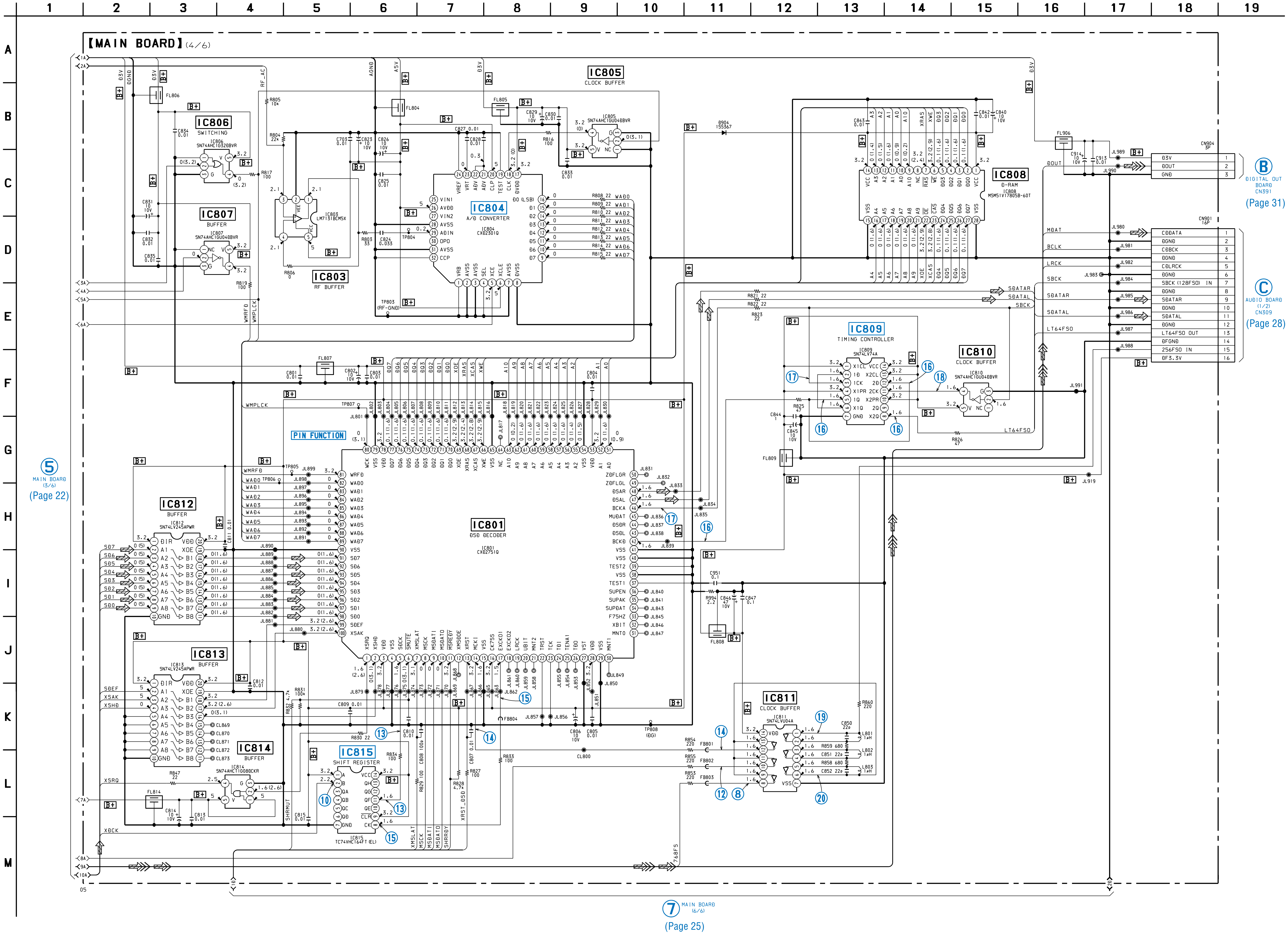

## 4-10. SCHEMATIC DIAGRAM – MAIN Board (5/6) –

• See page 38 for Waveforms. • See page 40 for IC Block Diagrams.

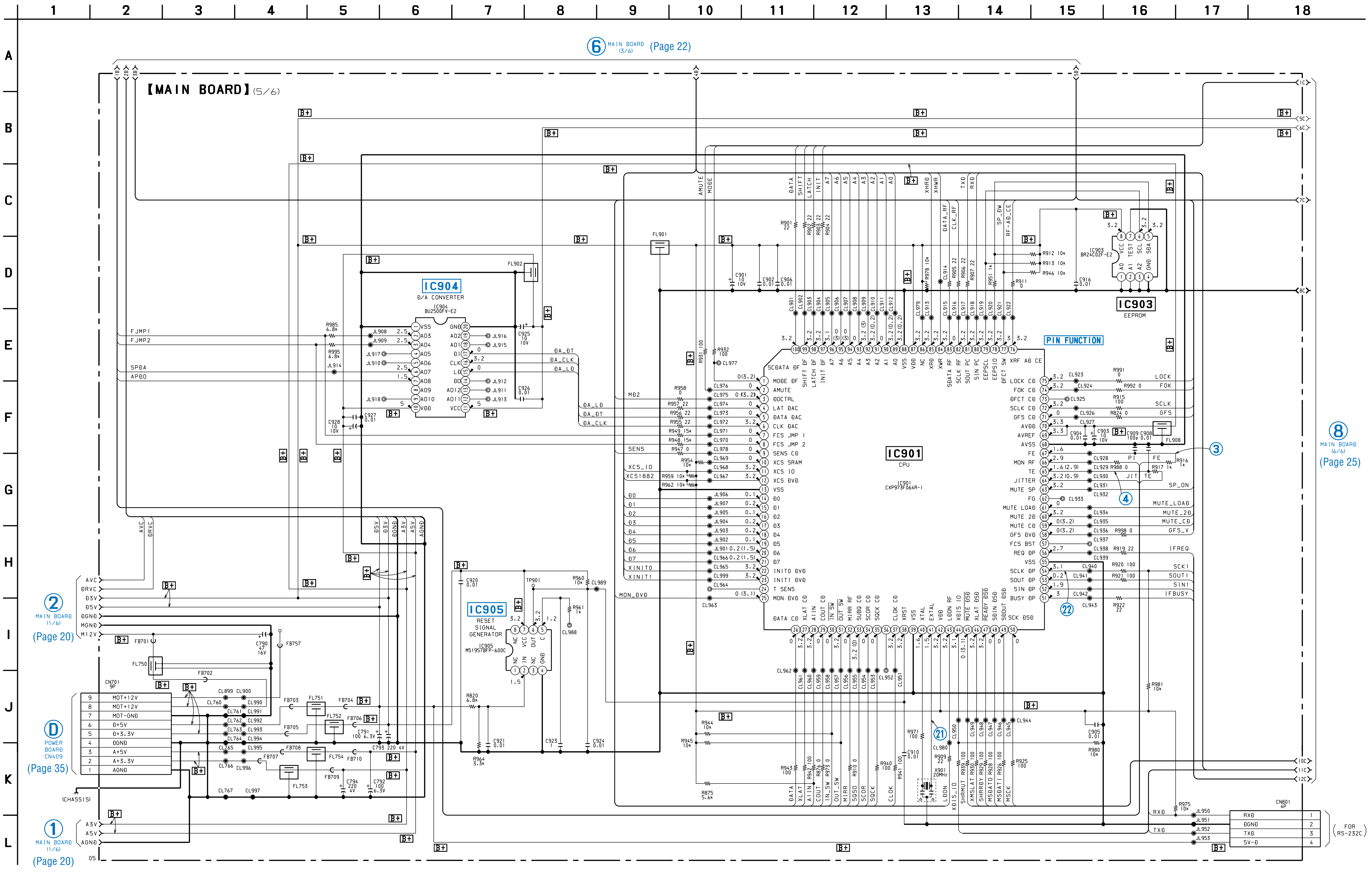

4-11. SCHEMATIC DIAGRAM – MAIN Board (6/6) –

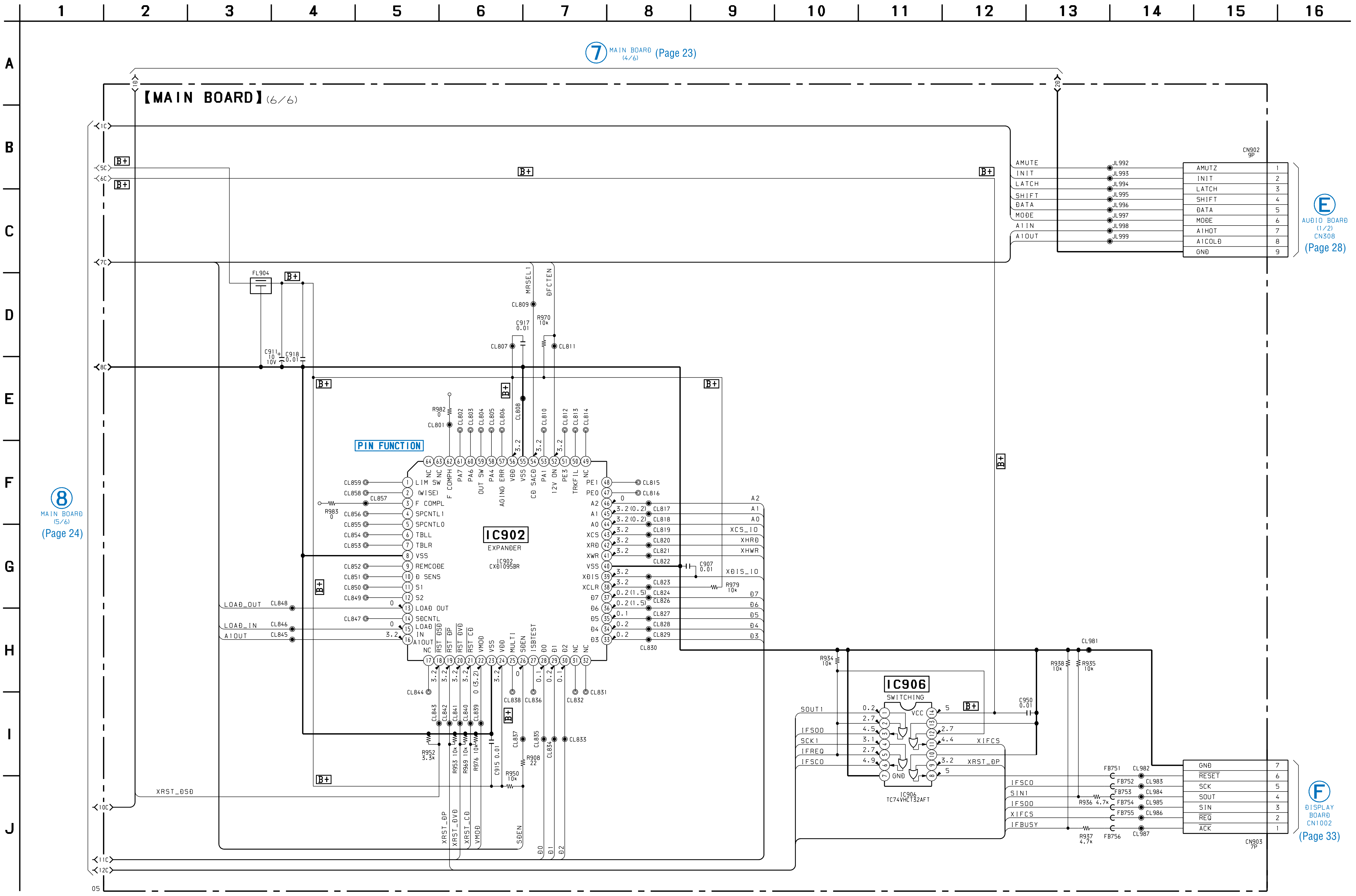

## 4-12. PRINTED WIRING BOARD – AUDIO Board (Component Side) –

• See page 15 for Circuit Boards Location.

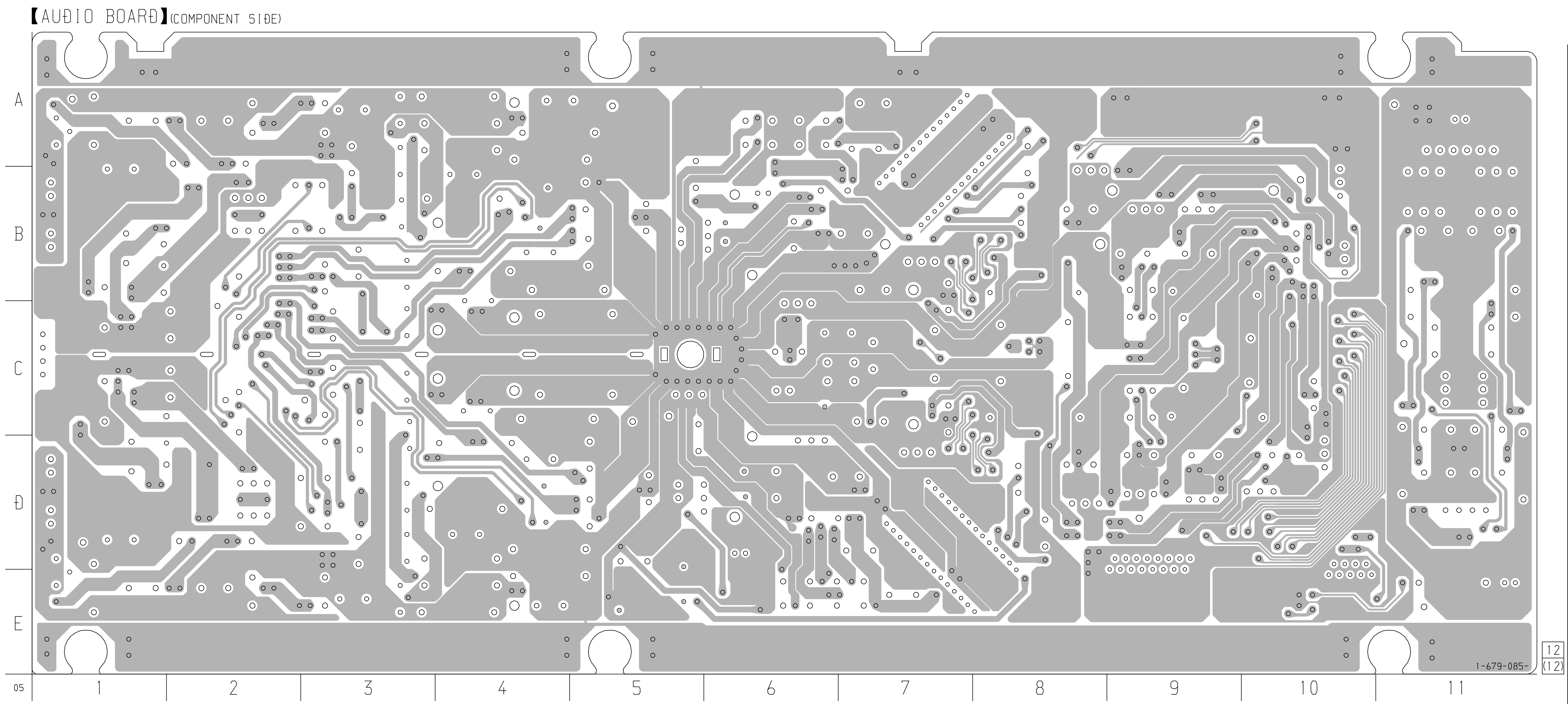


• **Semiconductor Location (Conductor Side)**

| Ref. No. | Location |
|---|---|
| D342 | D-6 |
| D343 | B-6 |
| D351 | D-1 |
| D352 | B-1 |
| D361 | E-11 |
| D362 | E-11 |
| IC101 | D-7 |
| IC103 | D-5 |
| IC104 | D-4 |
| IC105 | D-3 |
| IC106 | C-3 |
| IC107 | D-2 |
| IC201 | A-7 |
| IC203 | B-5 |
| IC204 | B-4 |
| IC205 | B-3 |
| IC206 | C-3 |
| IC207 | A-2 |
| IC301 | C-9 |
| IC302 | C-8 |
| IC305 | C-6 |
| IC306 | C-6 |
| IC307 | D-6 |
| IC308 | B-6 |
| IC309 | E-5 |
| IC310 | E-6 |
| IC312 | D-10 |
| IC313 | C-7 |
| IC341 | D-2 |
| IC342 | B-2 |
| IC361 | B-11 |
| Q101 | E-5 |
| Q102 | D-4 |
| Q103 | D-4 |
| Q161 | C-11 |
| Q201 | E-5 |
| Q202 | B-4 |
| Q203 | B-4 |
| Q261 | C-11 |
| Q351 | D-1 |
| Q352 | B-1 |
| Q353 | D-2 |
| Q354 | B-2 |
| Q355 | D-2 |
| Q356 | B-2 |
| Q361 | D-11 |
| Q362 | D-11 |

## 4-13. PRINTED WIRING BOARDS – AUDIO (Conductor Side)/LINE OUT/HEADPHONE Boards –

• See page 15 for Circuit Boards Location.

【AUDIO BOARD】(CONDUCTOR SIDE)

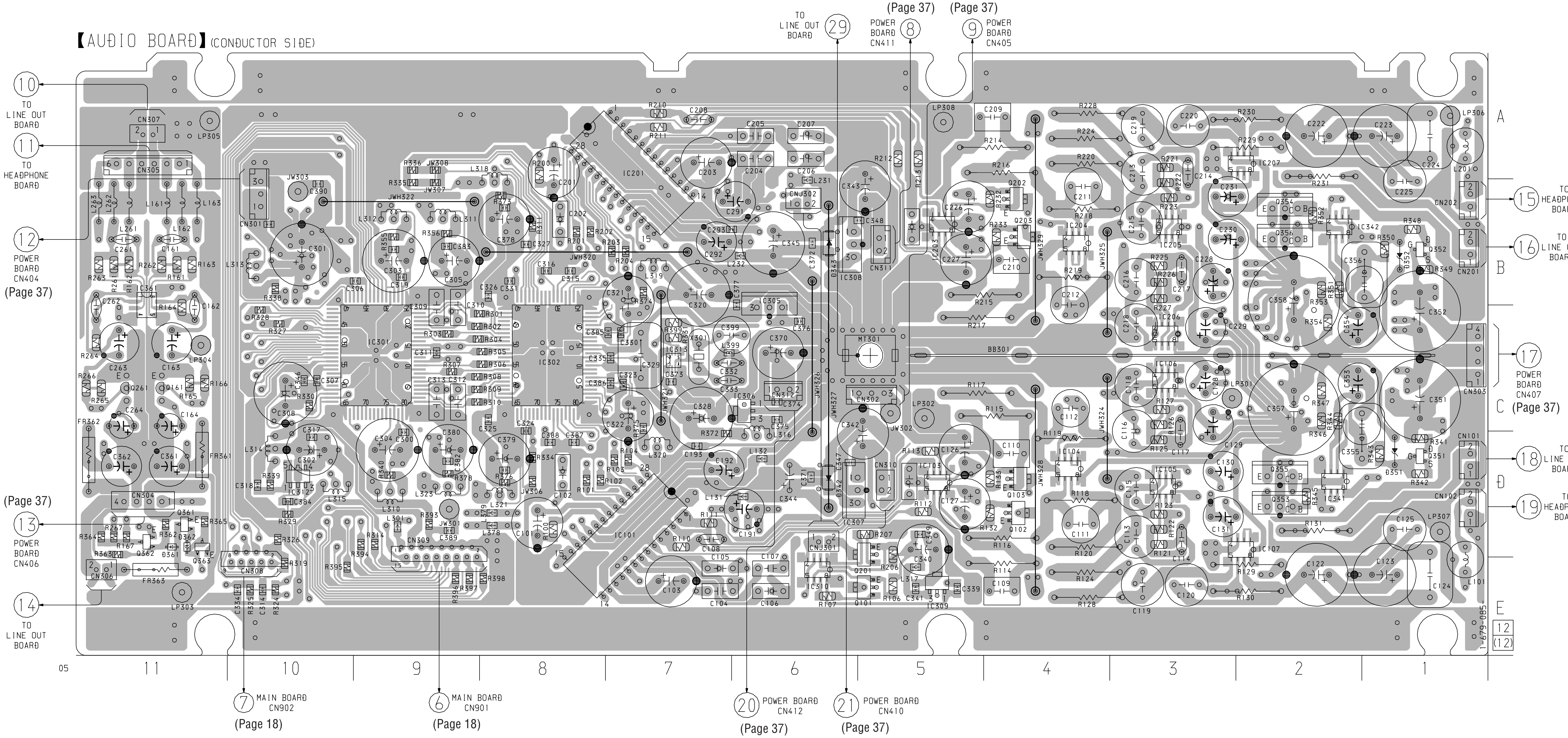


【LINE OUT BOARD】(COMPONENT SIDE)

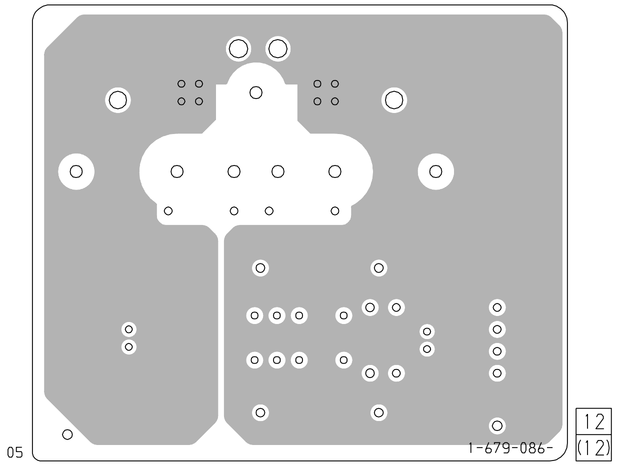


【LINE OUT BOARD】(CONDUCTOR SIDE)

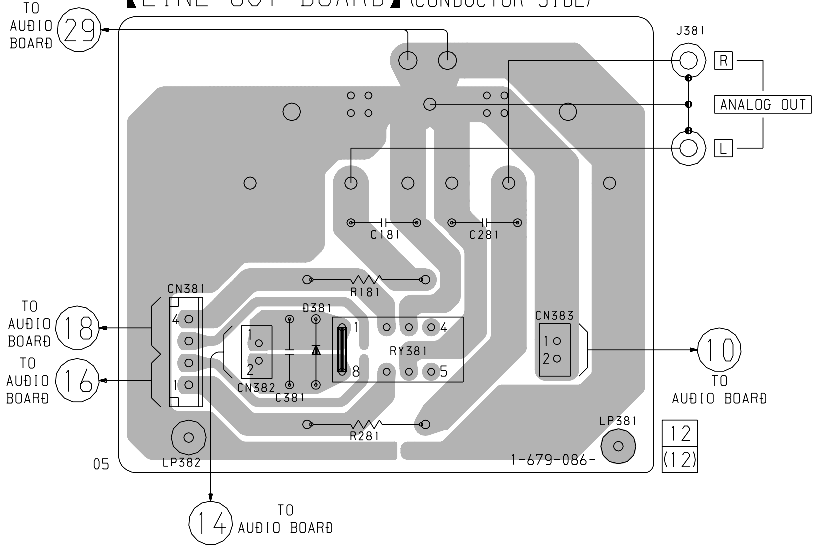


【HEADPHONE BOARD】(COMPONENT SIDE)

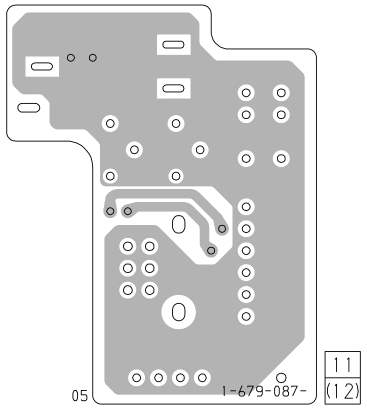


【HEADPHONE BOARD】(CONDUCTOR SIDE)

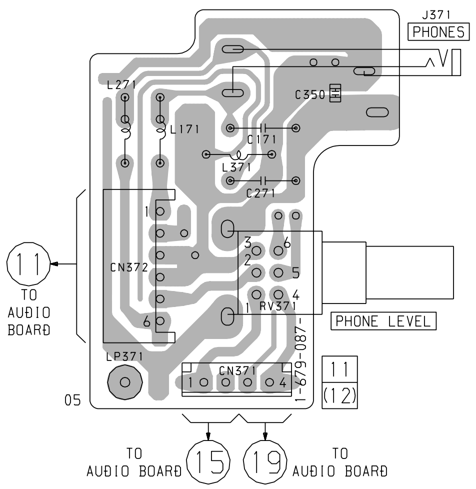


There are a few cases that the part isn't mounted in model is printed on diagrams.

## 4-14. SCHEMATIC DIAGRAM – AUDIO Board (1/2) –

• See page 38 for Waveforms. • See page 40 for IC Block Diagrams.

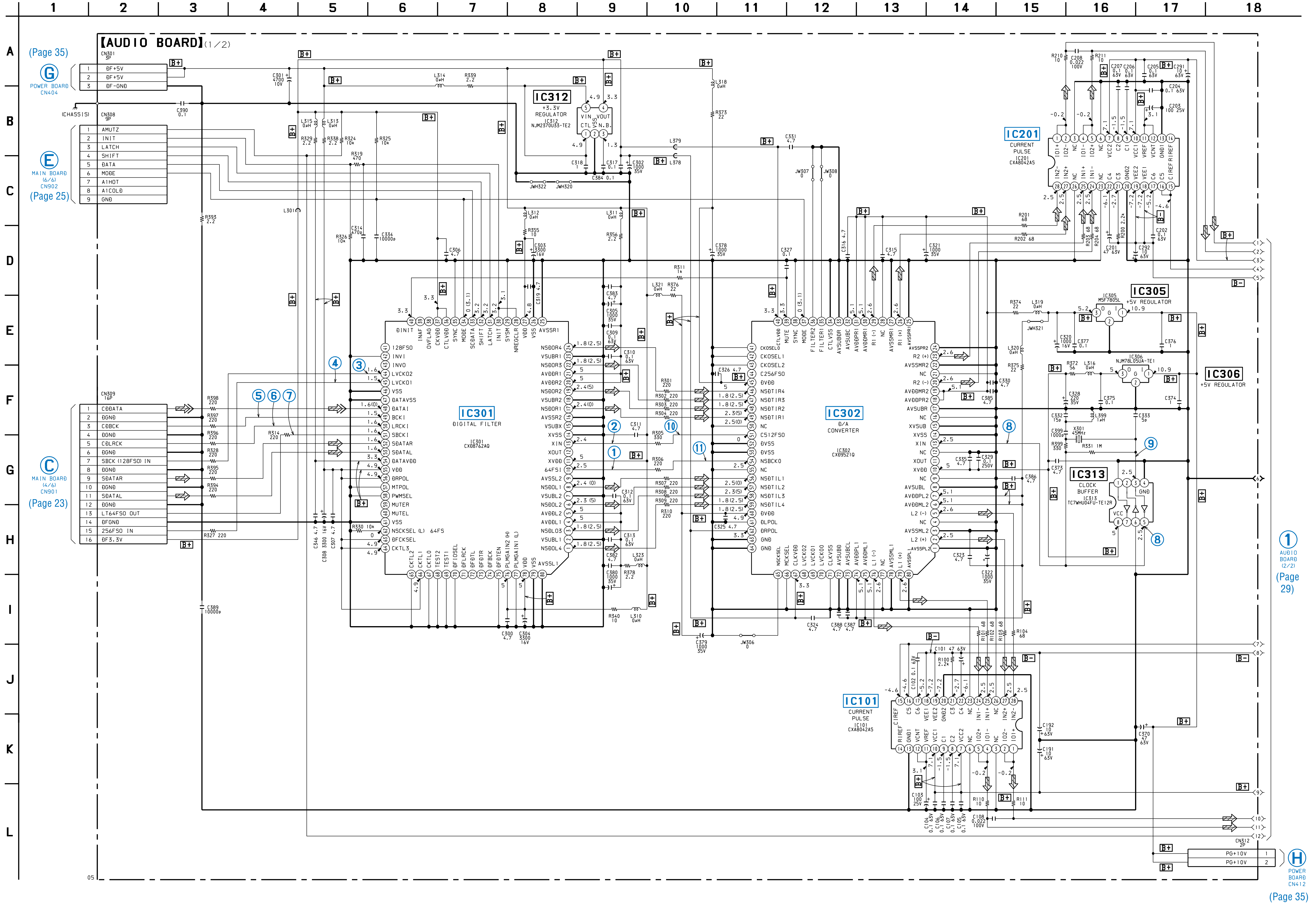

## 4-15. SCHEMATIC DIAGRAM – AUDIO (2/2)/LINE OUT/HEADPHONE Boards –

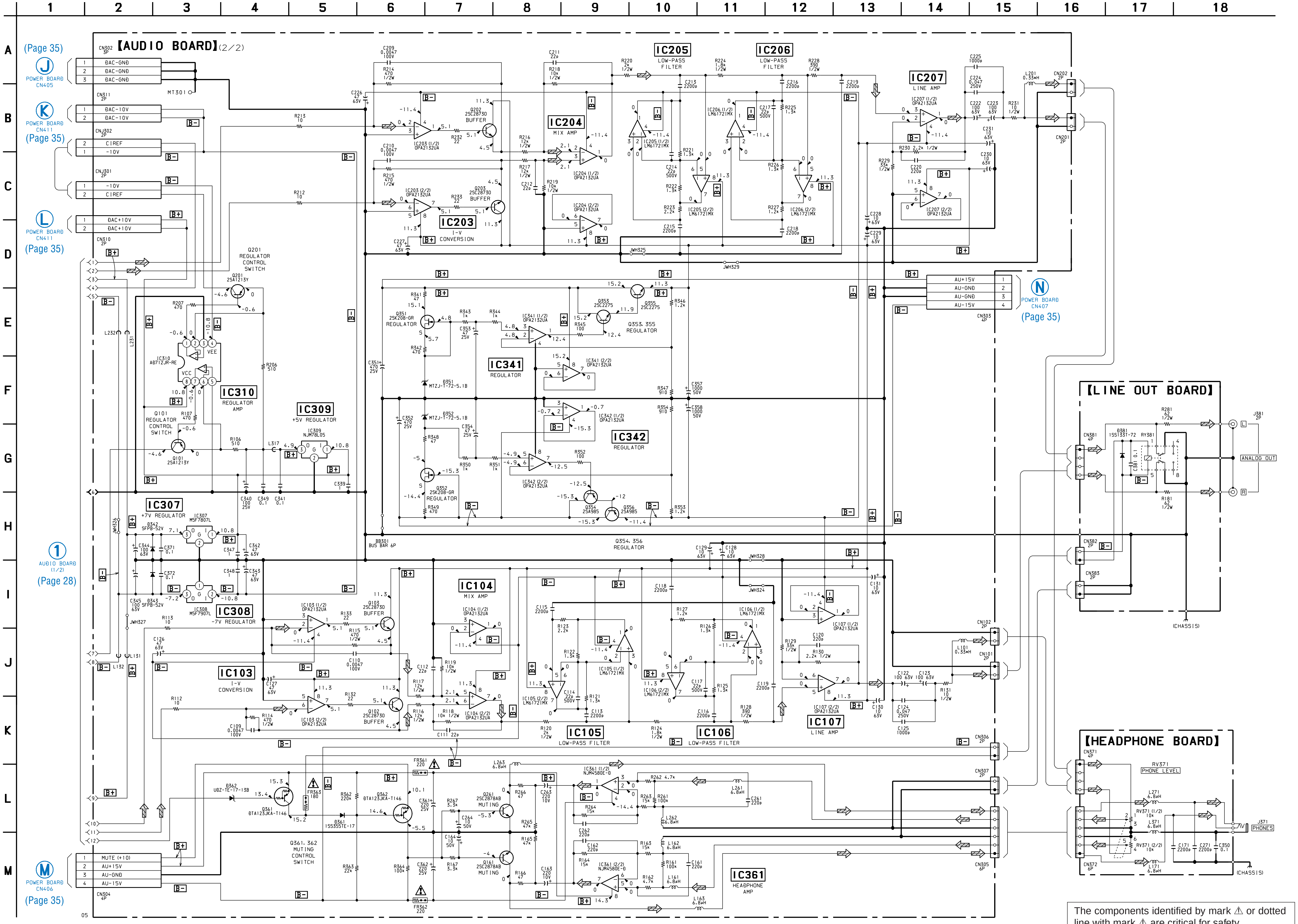


The components identified by mark ⚠ or dotted line with mark ⚠ are critical for safety.
Replace only with part number specified.

**4-16. PRINTED WIRING BOARD – DIGITAL OUT Board –** • See page 15 for Circuit Boards Location.

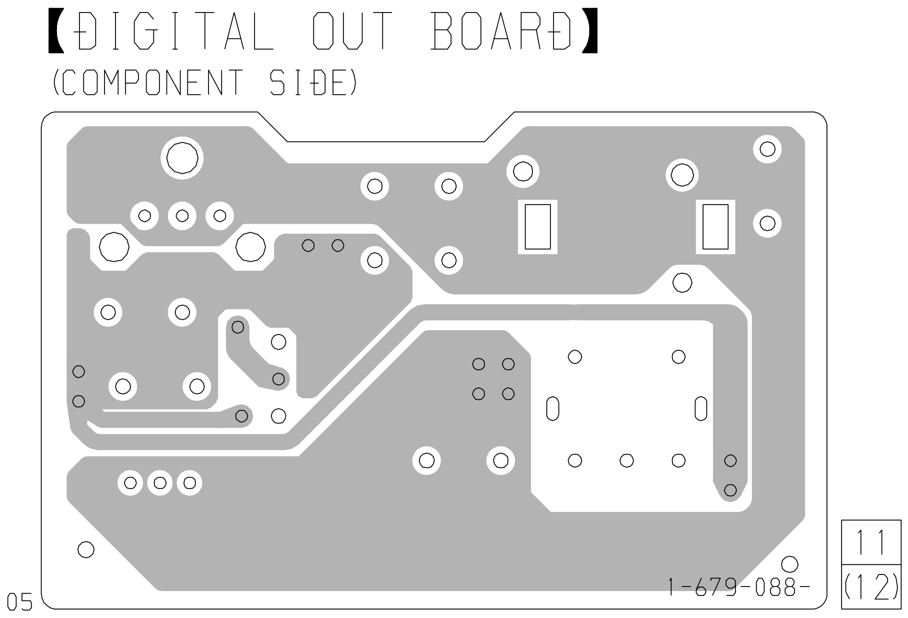


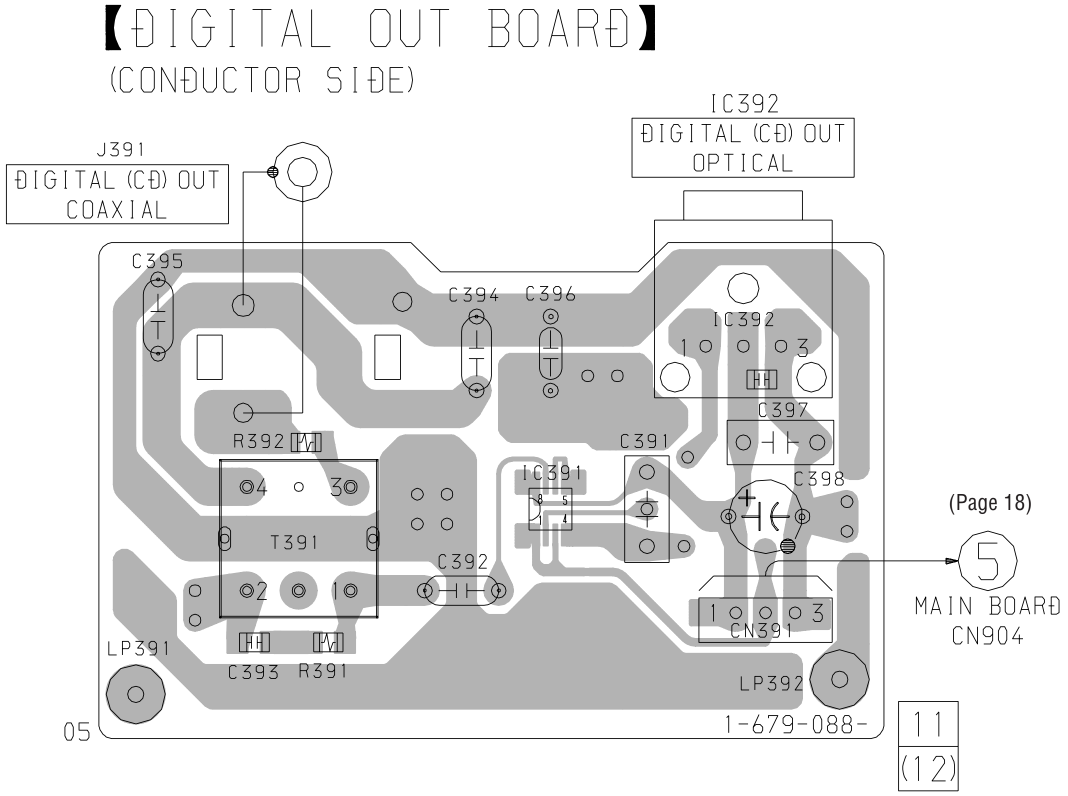

4-17. SCHEMATIC DIAGRAM – DIGITAL OUT Board –

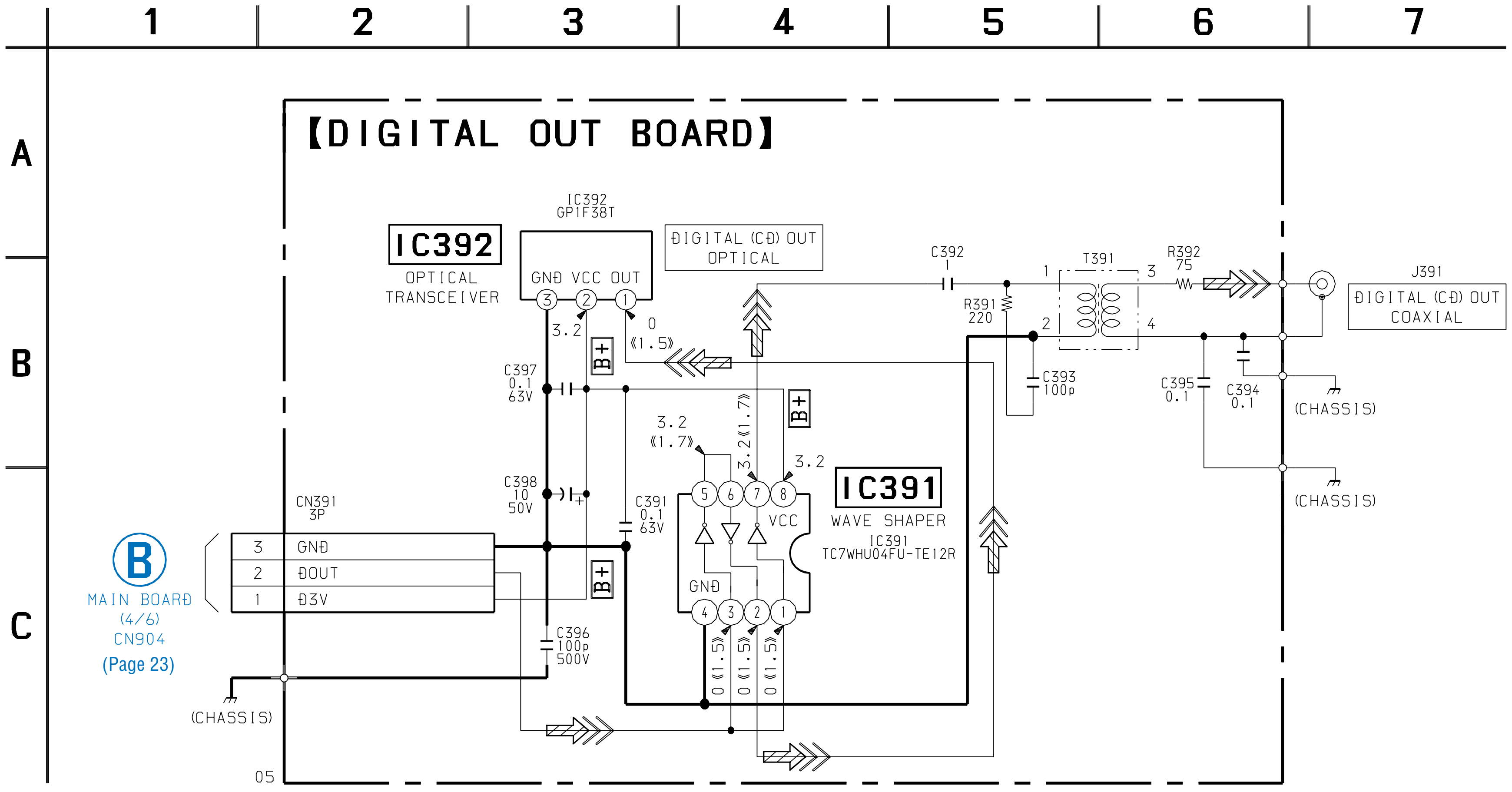

## 4-18. PRINTED WIRING BOARD – DISPLAY Board –

• See page 15 for Circuit Boards Location.

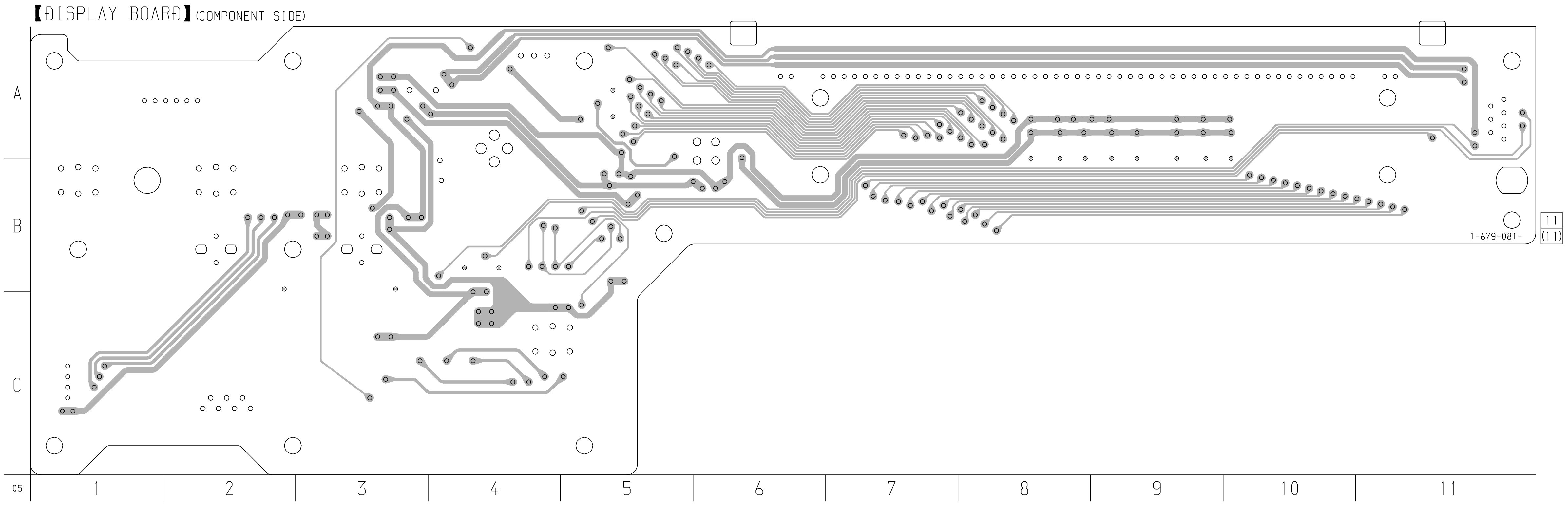


• **Semiconductor Location**

| Ref. No. | Location |
|---|---|
| D1003 | B-3 |
| D1004 | B-2 |
| D1005 | C-3 |
| IC1001 | B-4 |
| IC1002 | B-6 |
| Q1001 | A-10 |
| Q1002 | A-9 |
| Q1003 | A-9 |
| Q1004 | A-9 |
| Q1005 | A-9 |
| Q1006 | A-8 |
| Q1007 | A-8 |
| Q1008 | A-8 |
| Q1009 | A-5 |
| Q1010 | A-5 |
| Q1021 | B-4 |
| Q1022 | B-4 |
| Q1023 | B-3 |
| Q1024 | B-2 |

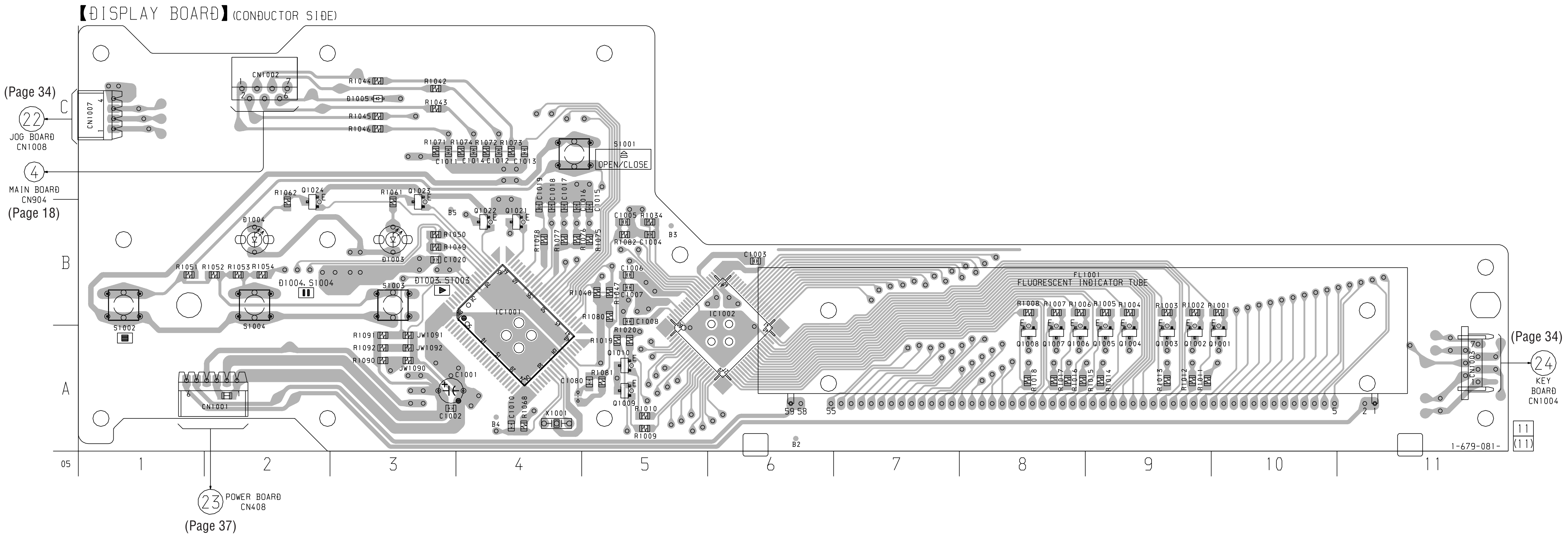


There are a few cases that the part isn't mounted in model is printed on diagrams.

## 4-19. SCHEMATIC DIAGRAM – DISPLAY Board – • See page 38 for Waveform. • See page 40 for IC Block Diagram.

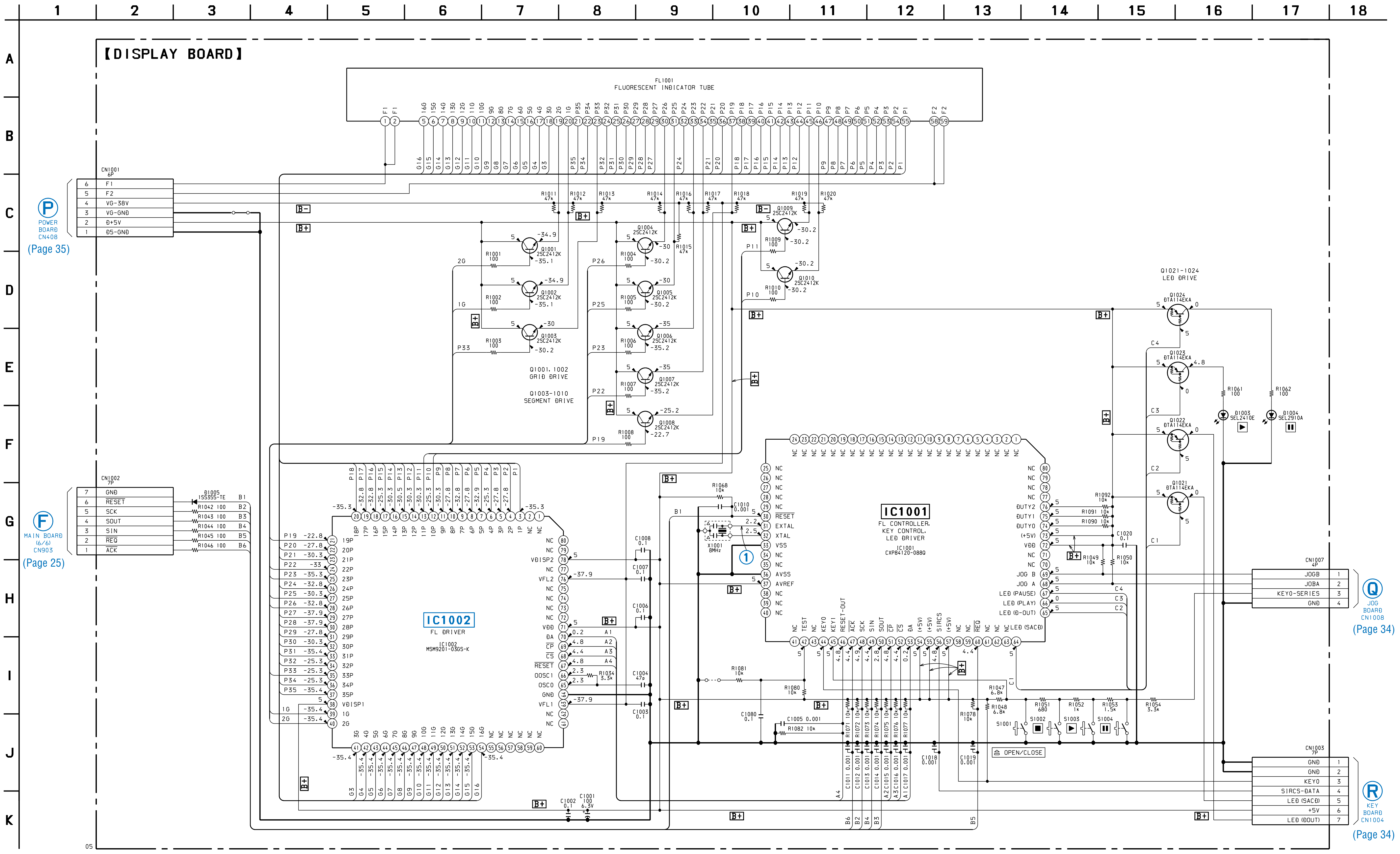

## 4-20. PRINTED WIRING BOARDS – JOG/KEY/R. CNTL Boards –

• See page 15 for Circuit Boards Location.

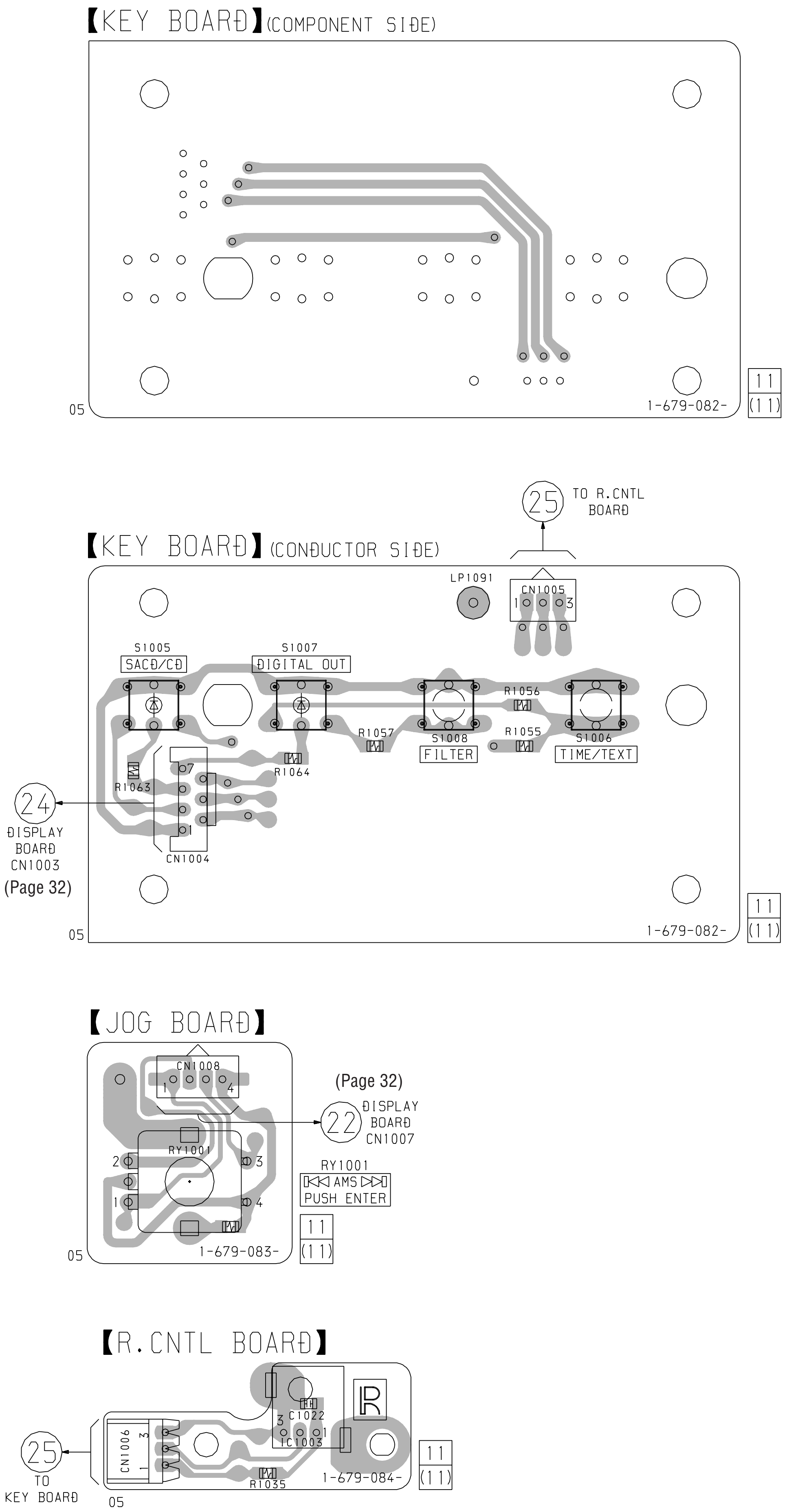


## 4-21. SCHEMATIC DIAGRAM – JOG/KEY/R. CNTL Boards –

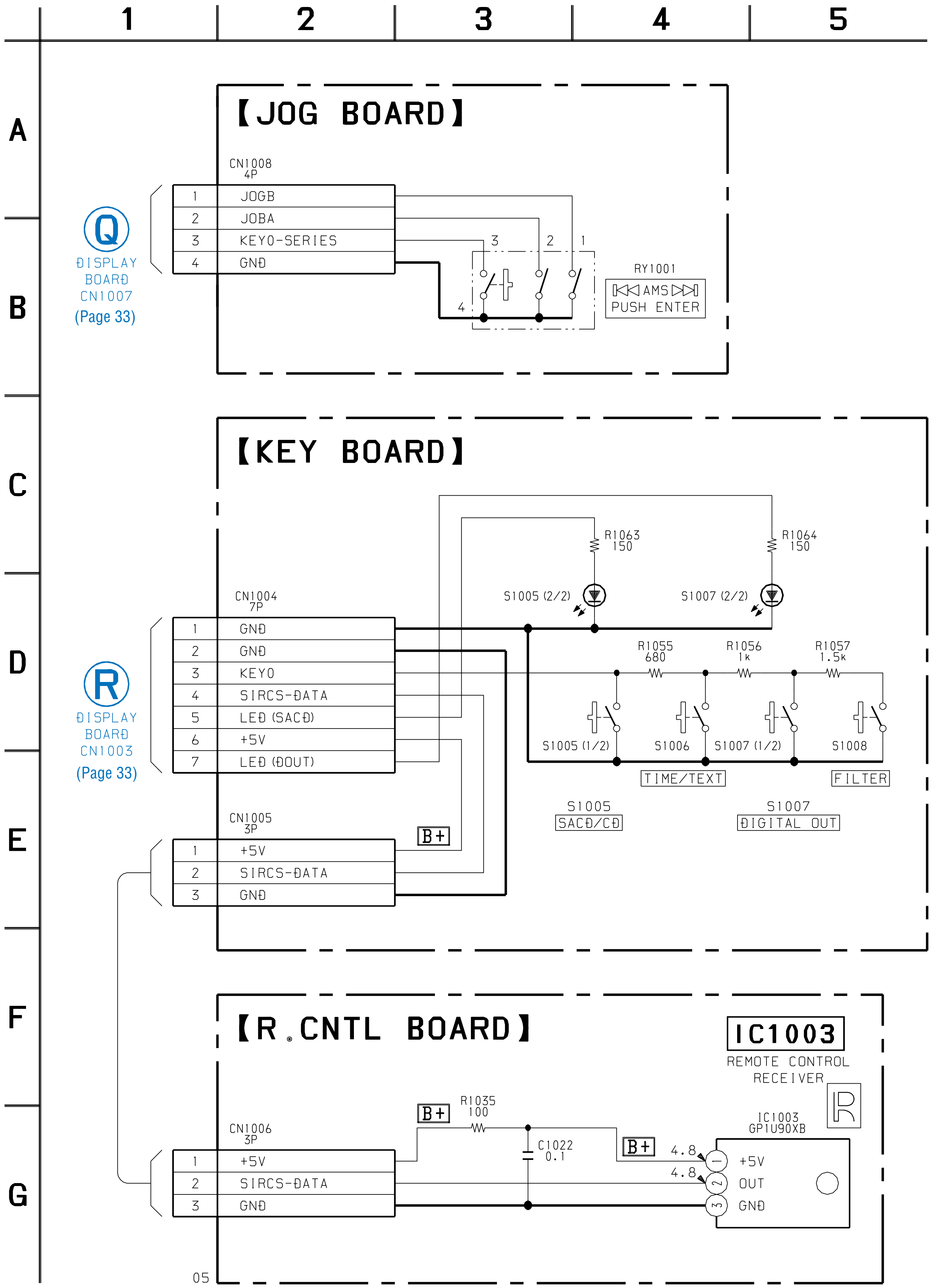

4-22. SCHEMATIC DIAGRAM – POWER/AC/POWER SWITCH Boards –

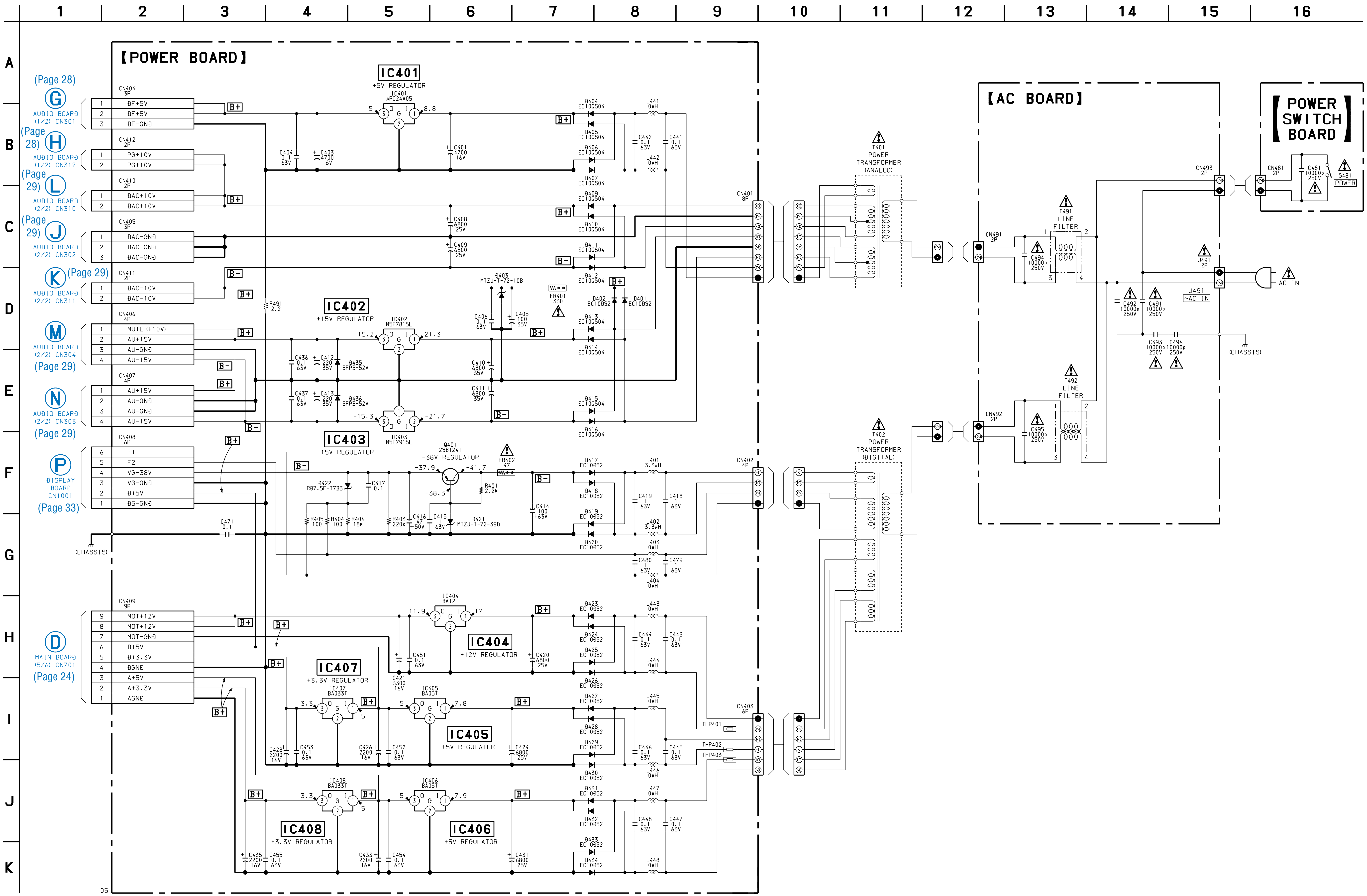


The components identified by mark ⚠ or dotted line with mark ⚠ are critical for safety.
Replace only with part number specified.

## 4-23. PRINTED WIRING BOARD – POWER Board (Component Side) –

• See page 15 for Circuit Boards Location.

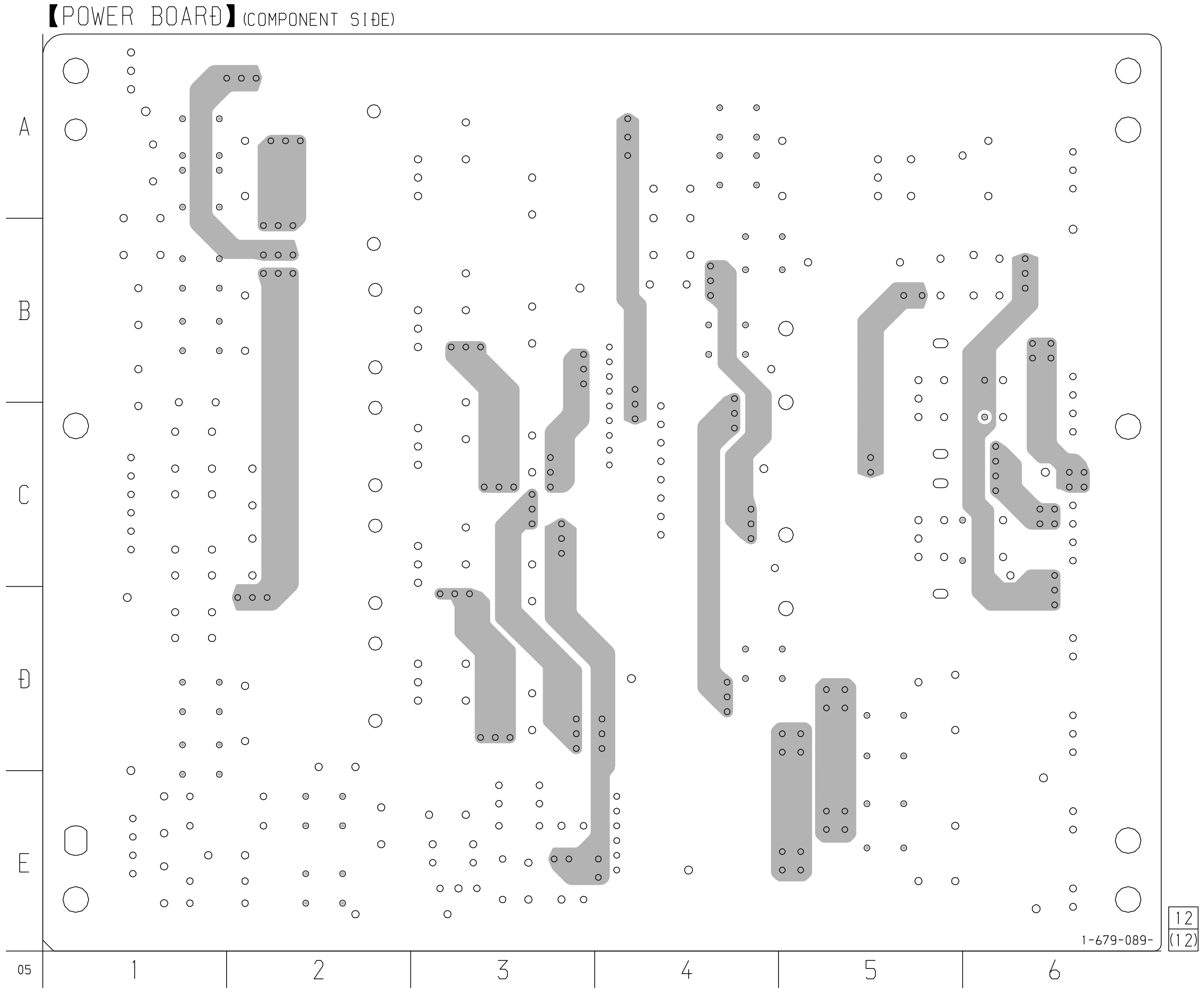


• **Semiconductor Location (Conductor Side)**

| Ref. No. | Location |
|---|---|
| D401 | B-4 |
| D402 | B-4 |
| D403 | B-6 |
| D404 | A-4 |
| D405 | A-4 |
| D406 | A-4 |
| D407 | A-4 |
| D409 | E-5 |
| D410 | E-5 |
| D411 | D-5 |
| D412 | D-5 |
| D413 | D-4 |
| D414 | D-4 |
| D415 | B-4 |
| D416 | B-4 |
| D417 | E-2 |
| D418 | E-2 |
| D419 | E-2 |
| D420 | E-2 |
| D421 | E-3 |
| D422 | E-3 |
| D423 | A-1 |
| D424 | B-1 |
| D425 | A-1 |
| D426 | A-1 |
| D427 | B-1 |
| D428 | B-1 |
| D429 | B-1 |
| D430 | B-1 |
| D431 | D-1 |
| D432 | D-1 |
| D433 | D-1 |
| D434 | D-1 |
| D435 | C-6 |
| D436 | B-6 |
| IC401 | A-5 |
| IC402 | C-5 |
| IC403 | B-5 |
| IC404 | A-3 |
| IC405 | C-3 |
| IC406 | D-3 |
| IC407 | B-3 |
| IC408 | C-3 |
| Q401 | E-3 |

## 4-24. PRINTED WIRING BOARDS – POWER (Conductor Side)/AC/POWER SWITCH Boards –

• See page 15 for Circuit Boards Location.

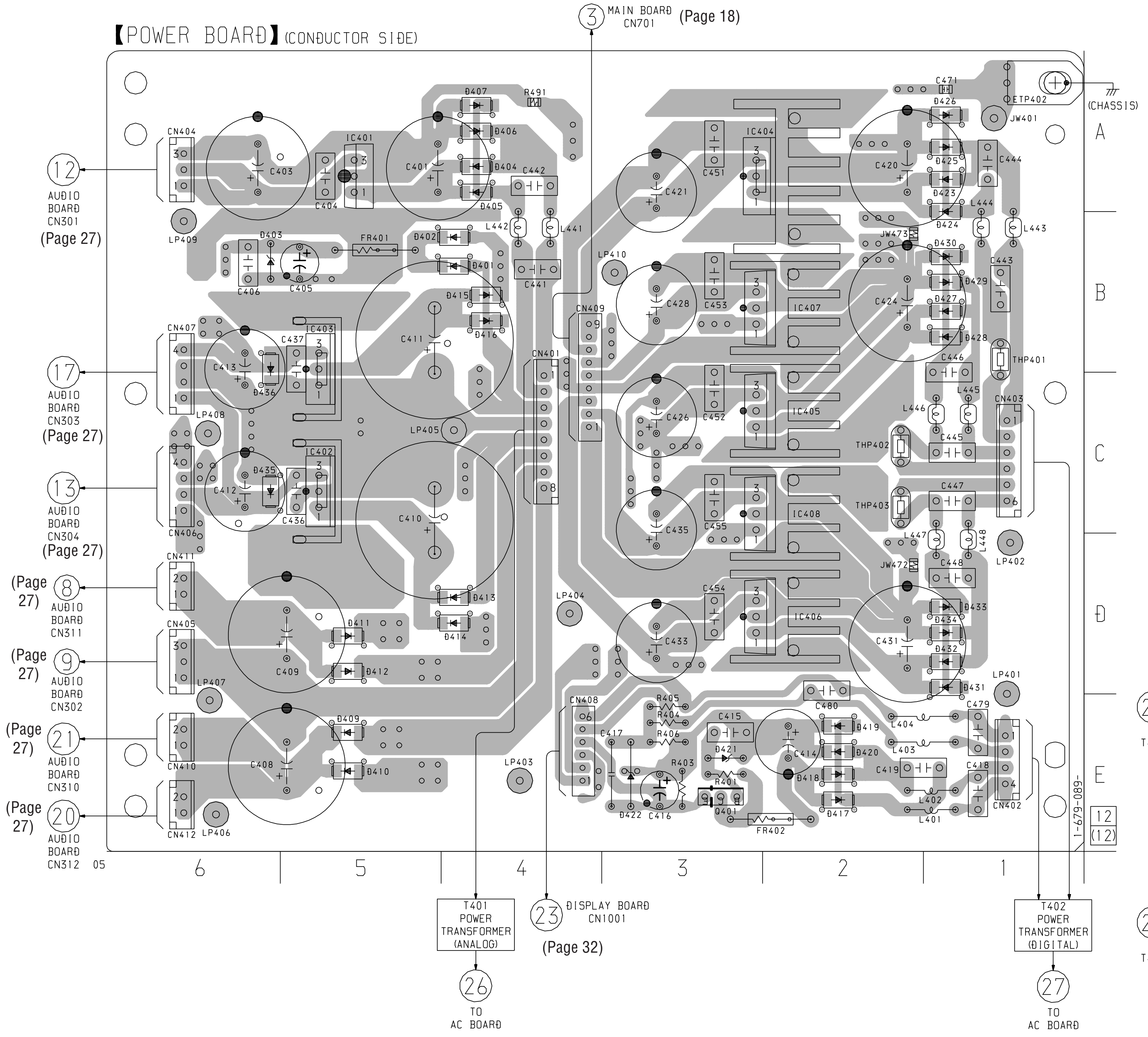


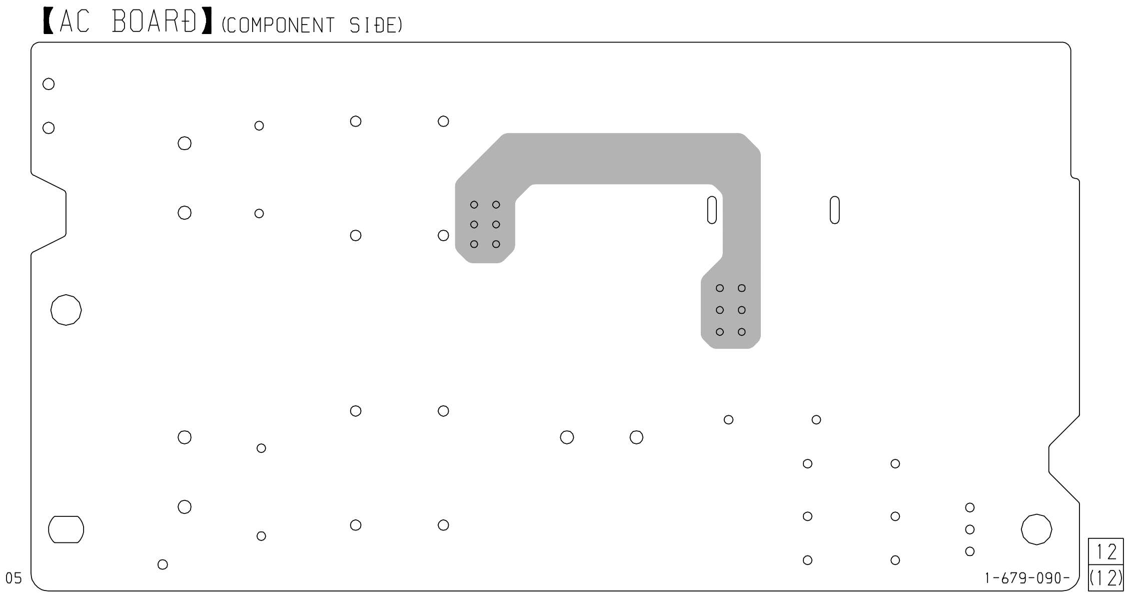


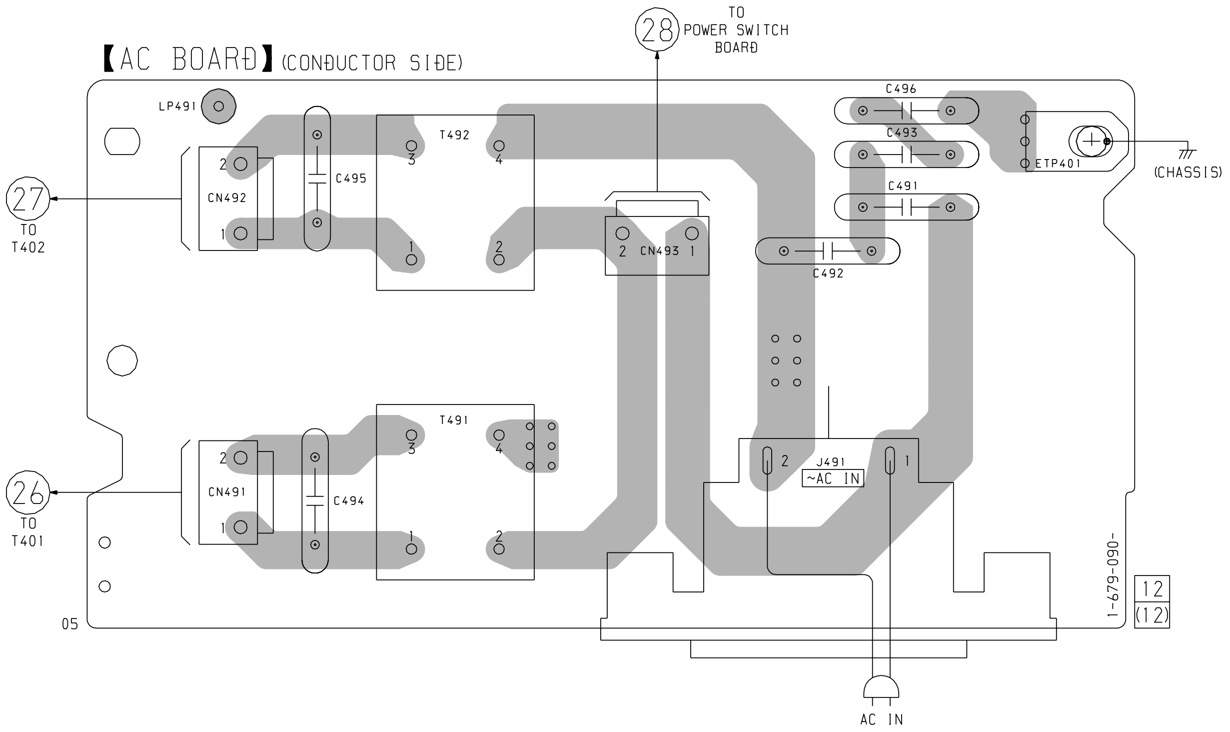


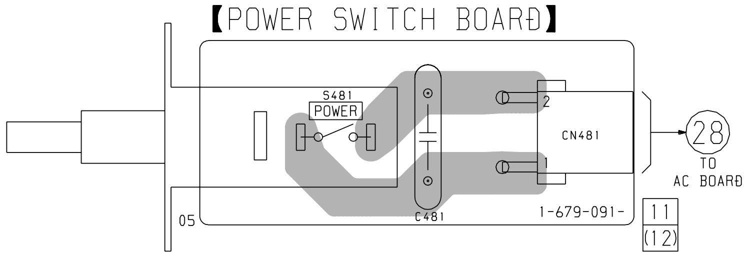

- **Waveforms**

**– RF Board –**

❶ IC001 ㊴ (TE) (CD PLAY)

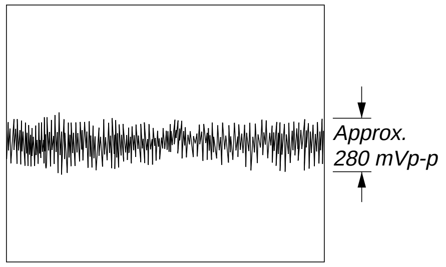


❶ IC001 ㊴ (TE) (SACD PLAY)

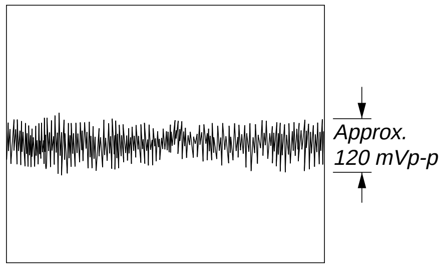


❷ IC001 ㊵ (FE) (CD PLAY)

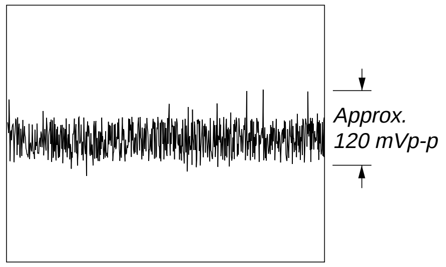


❷ IC001 ㊵ (FE) (SACD PLAY)

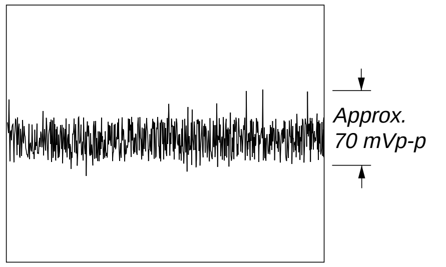


❸ IC001 (57) (RFAC) (CD PLAY)

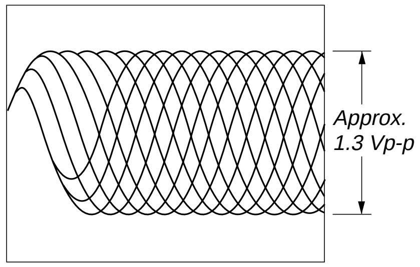


❸ IC001 (57) (RFAC) (SACD PLAY)

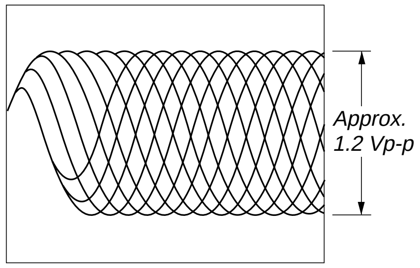


**– MAIN Board –**

❶ IC509 ⑩ (WFCK), IC701 (151) (WFCK)

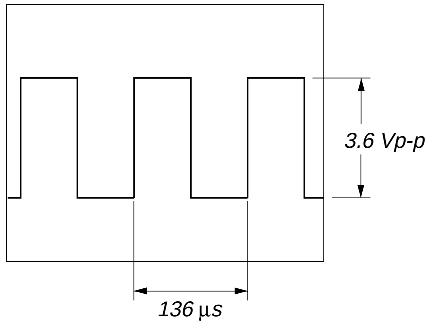


❷ IC509 ㉕ (MDP) (CD PLAY)

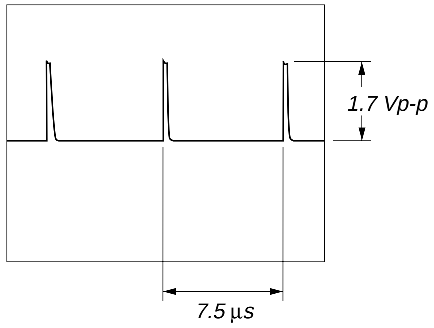


❸ IC509 ㊴ (FE), IC901 (67) (FE) (CD PLAY)

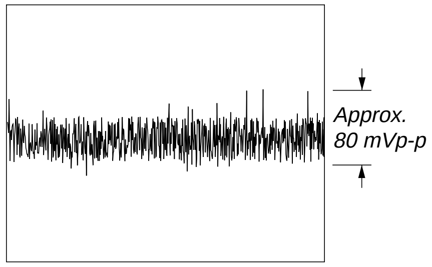


❸ IC509 ㊴ (FE), IC901 (67) (FE) (SACD PLAY)

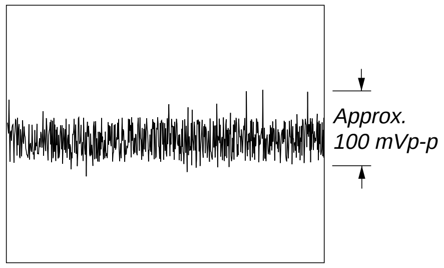


❹ IC509 ㊶ (TE), IC901 (65) (TE) (CD PLAY)

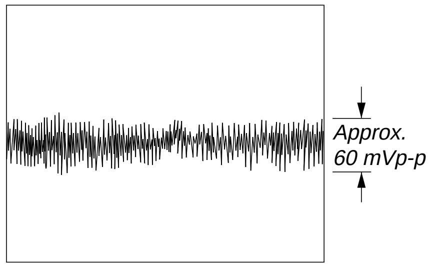


❹ IC509 ㊶ (TE), IC901 (65) (TE) (SACD PLAY)

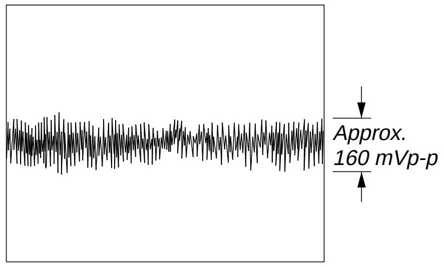


❺ IC509 ㊿ (RFAC), IC701 (117) (RFIN) (CD PLAY)

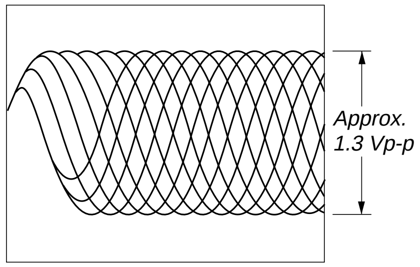


❺ IC509 ㊿ (RFAC), IC701 (117) (RFIN) (SACD PLAY)

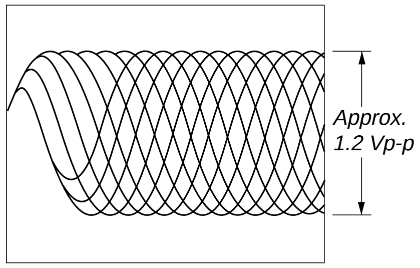


❻ IC509 (65) (LRCK), IC701 (163) (LRCK)

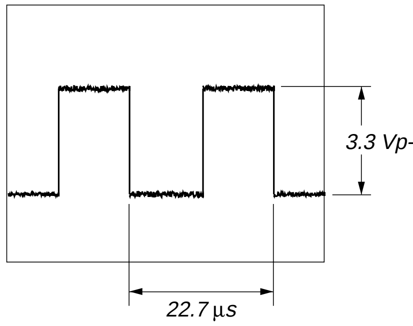


❼ IC509 (67) (BCLK), IC701 (158) (BCLK)

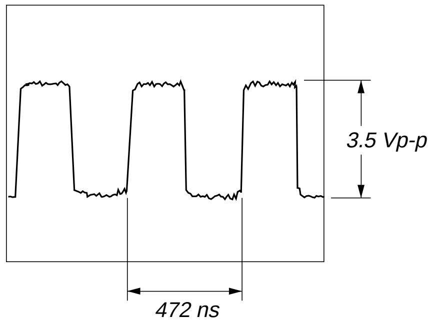


❽ IC509 (71) (XTAI), IC811 ⑧

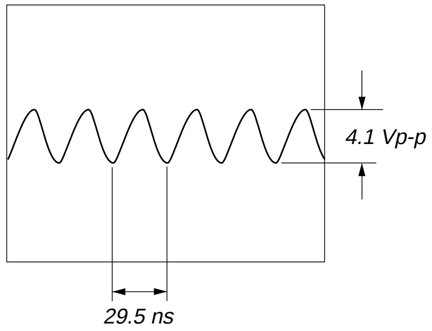


❾ IC509 (80) (EXCK), IC701 (147) (EXCK) (CD mode)

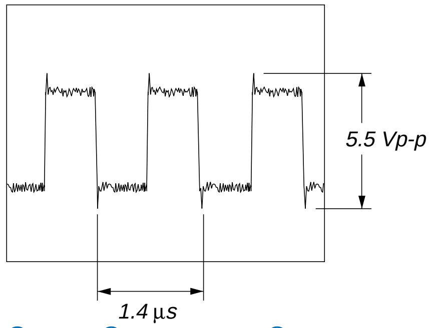


❿ IC701 ㊽ (DCK), IC815 ② (B) (CD mode)

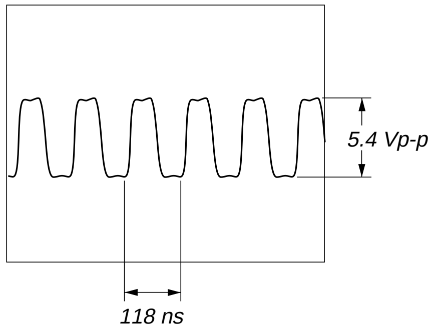


❿ IC701 ㊽ (DCK), IC815 ② (B) (SACD mode)

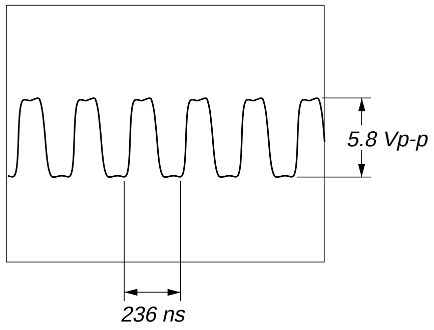


⓫ IC701 (167) (XTAL)

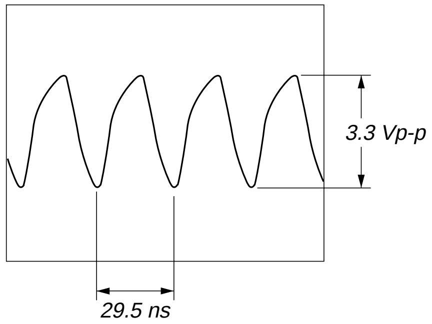


⓬ IC701 (170) (XTL1), IC811 ⑩

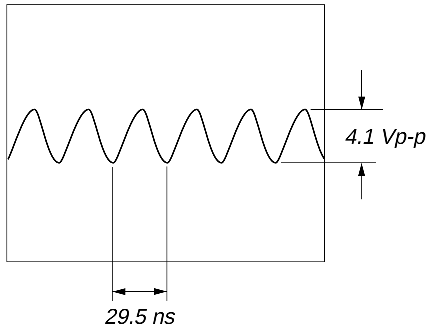


⓭ IC801 ⑤ (SDCK), IC815 ⑪ (QF) (CD mode)

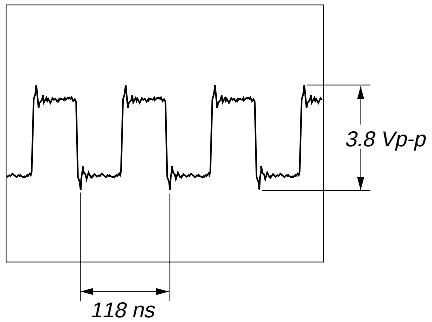


⓭ IC801 ⑤ (SDCK), IC815 ⑪ (QF) (SACD mode)

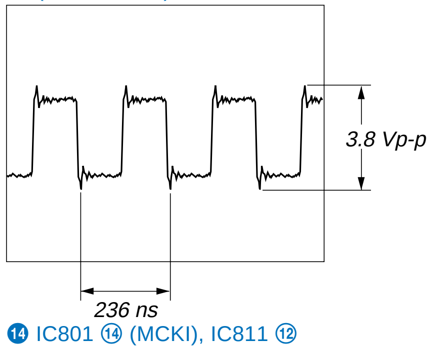


⓮ IC801 ⑭ (MCKI), IC811 ⑫

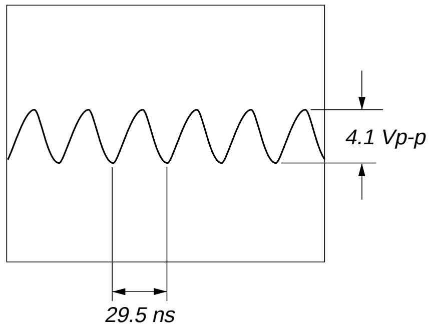

⓯ IC801 ⑰ (EXCK01), IC815 ⑧ (CK)

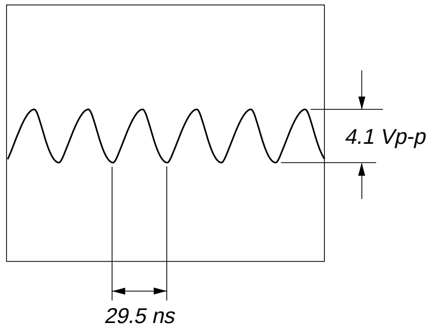


⓰ IC801 ㊷ (BCKD),
IC809 ⑤ (1Q), ⑧ (X2Q), ⑫ (2D)

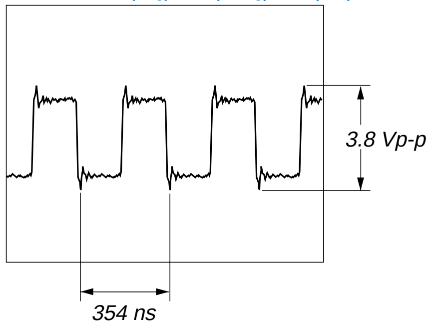


⓱ IC801 ㊻ (BCKA), IC809 ③ (1CK)

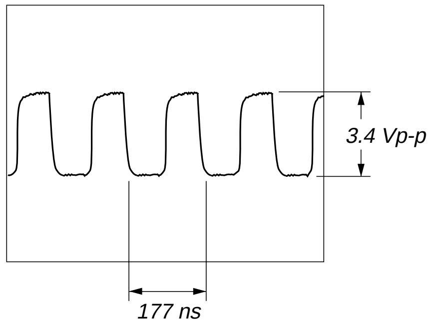


⓲ IC809 ⑪ (2CK)

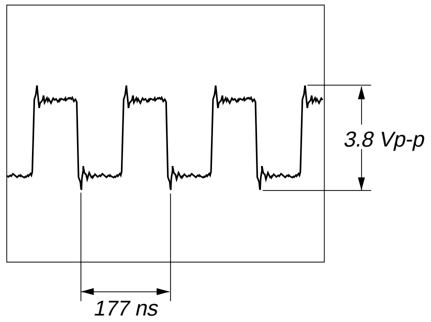


⓳ IC811 ①

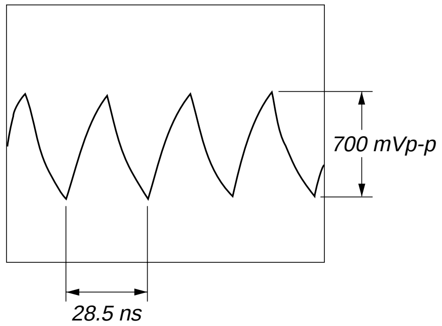


⓴ IC811 ⑥

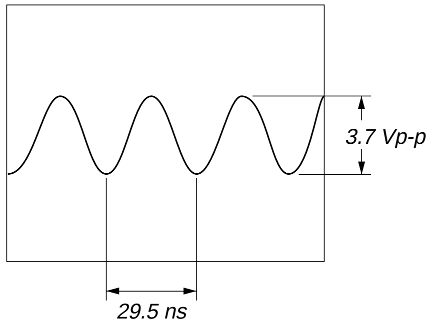


㉑ IC901 ㊶ (EXTAL)

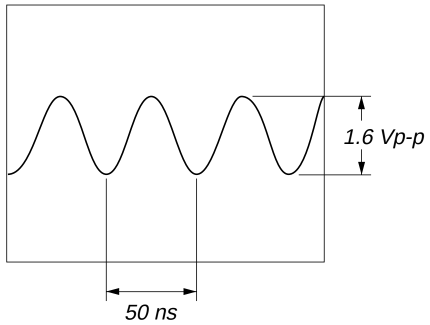


㉒ IC901 54 (SCLK DP)

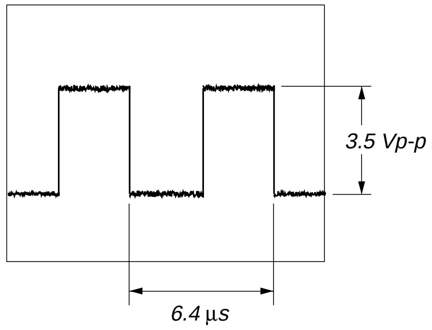


– AUDIO Board –

❶ IC301 ⑩ (64FSI)

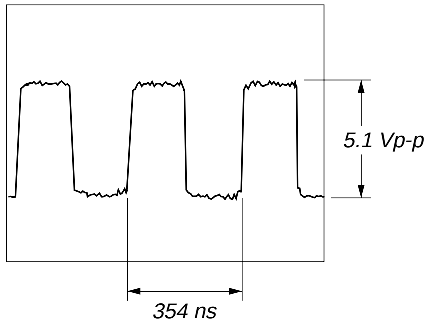


❷ IC301 ⑬ (XIN)

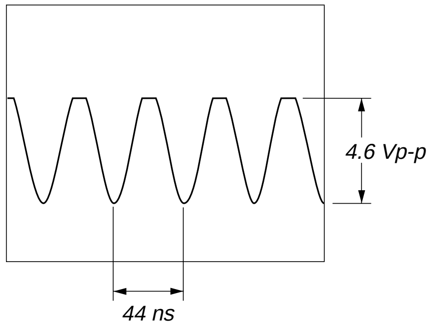


❸ IC301 ㊹ (LVCKO2)

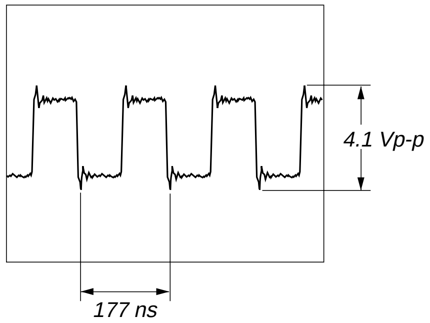


❹ IC301 ㊺ (LVCKO1)

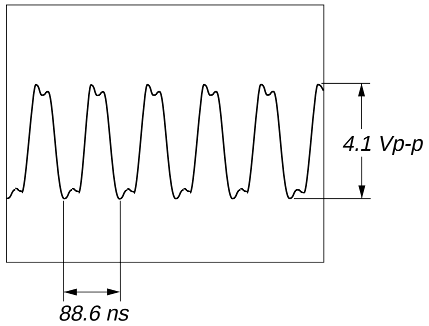


❺ IC301 ㊾ (BCKI)

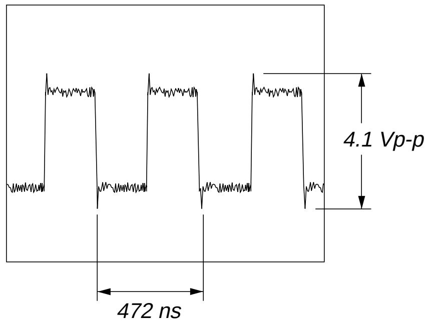


❻ IC301 ㊿ (LRCKI)

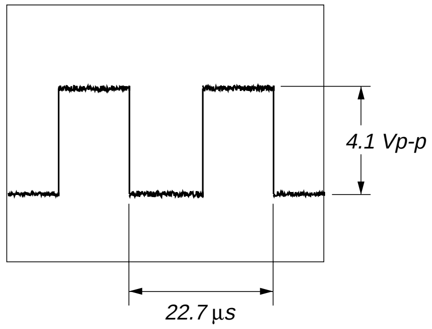


❼ IC301 51 (SBCKI) (CD mode)

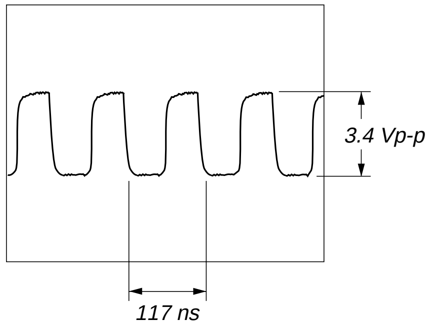


❼ IC301 51 (SBCKI) (SACD mode)

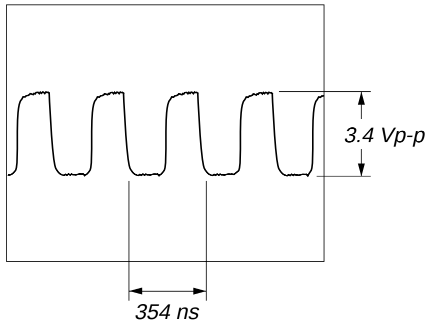


❽ IC302 ⑬ (XIN), IC313 ⑤

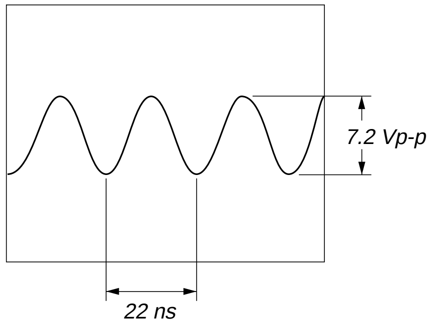


❾ IC313 ③

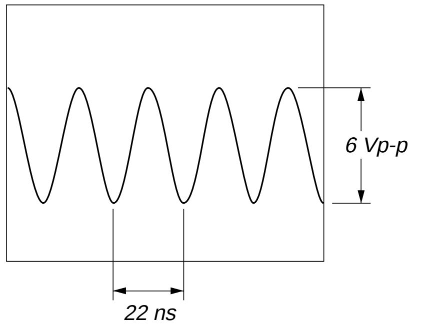


❿ IC302 51 (C512FSO)

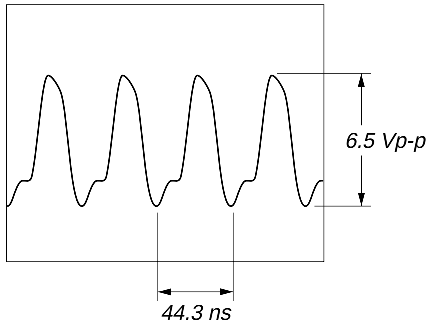


⓫ IC302 54 (NSBCKO)

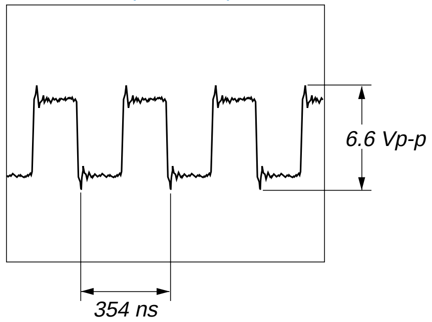


– DISPLAY Board –

❶ IC1001 ㉛ (EXTAL)

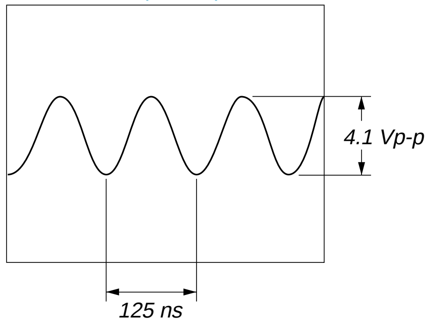

• **IC Block Diagrams**
**– RF Board –**

## IC001 CXD1881R

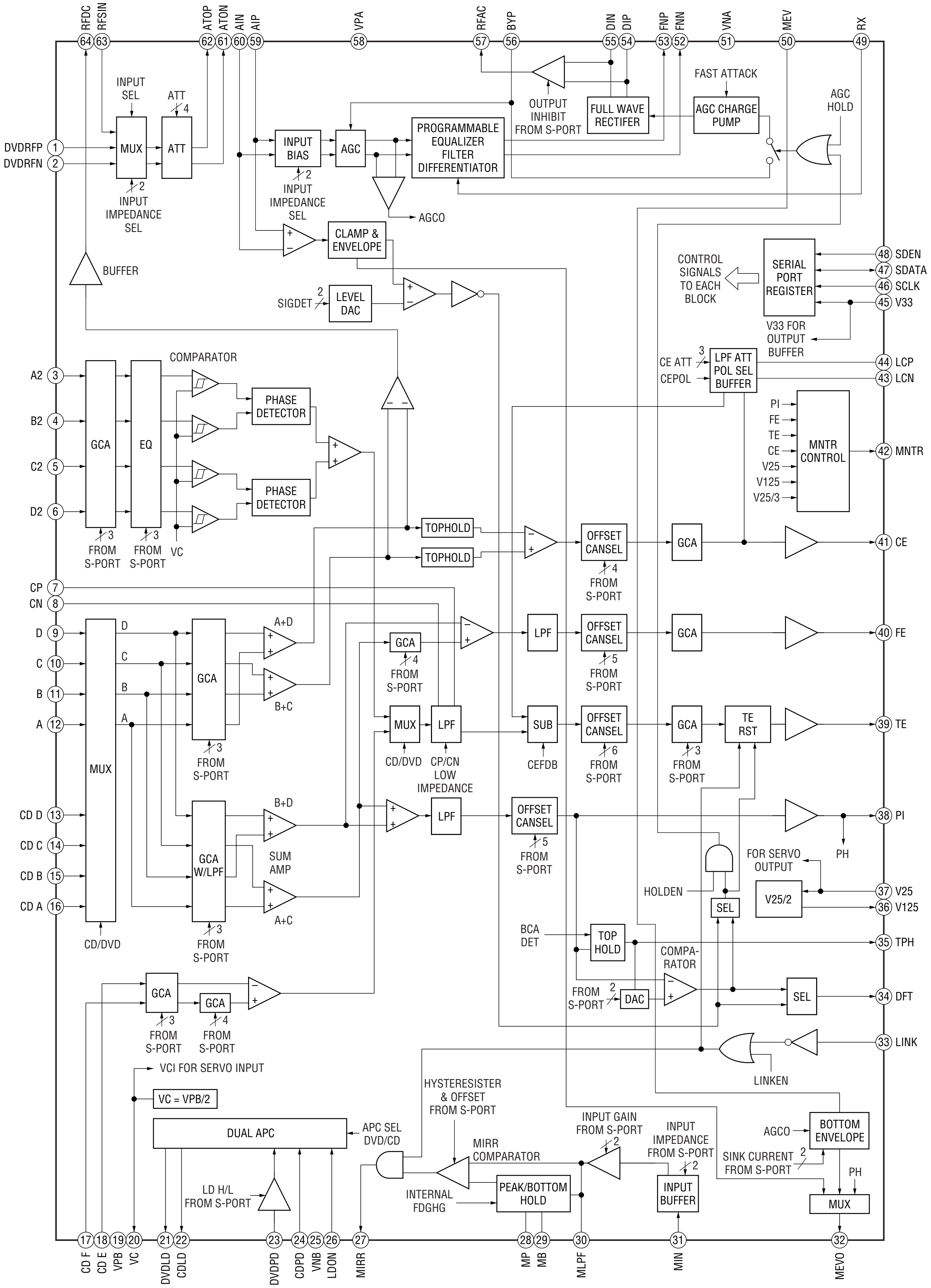


**– MAIN Board –**

## IC502 BA5983FP-E2

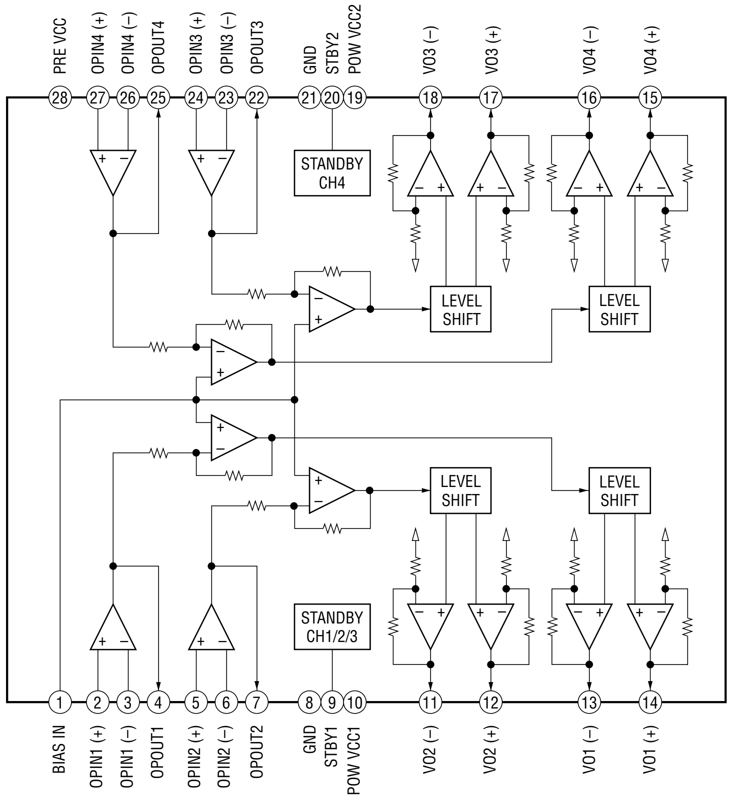


## IC512 BA5912AFP-YE2

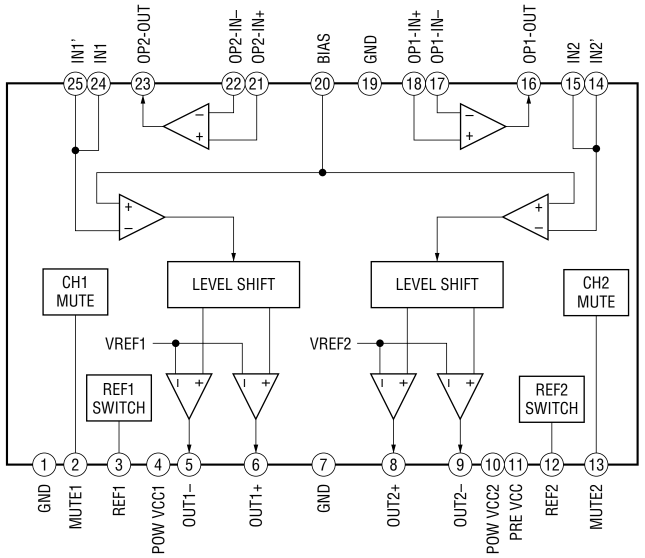

## IC509 CXD3008Q

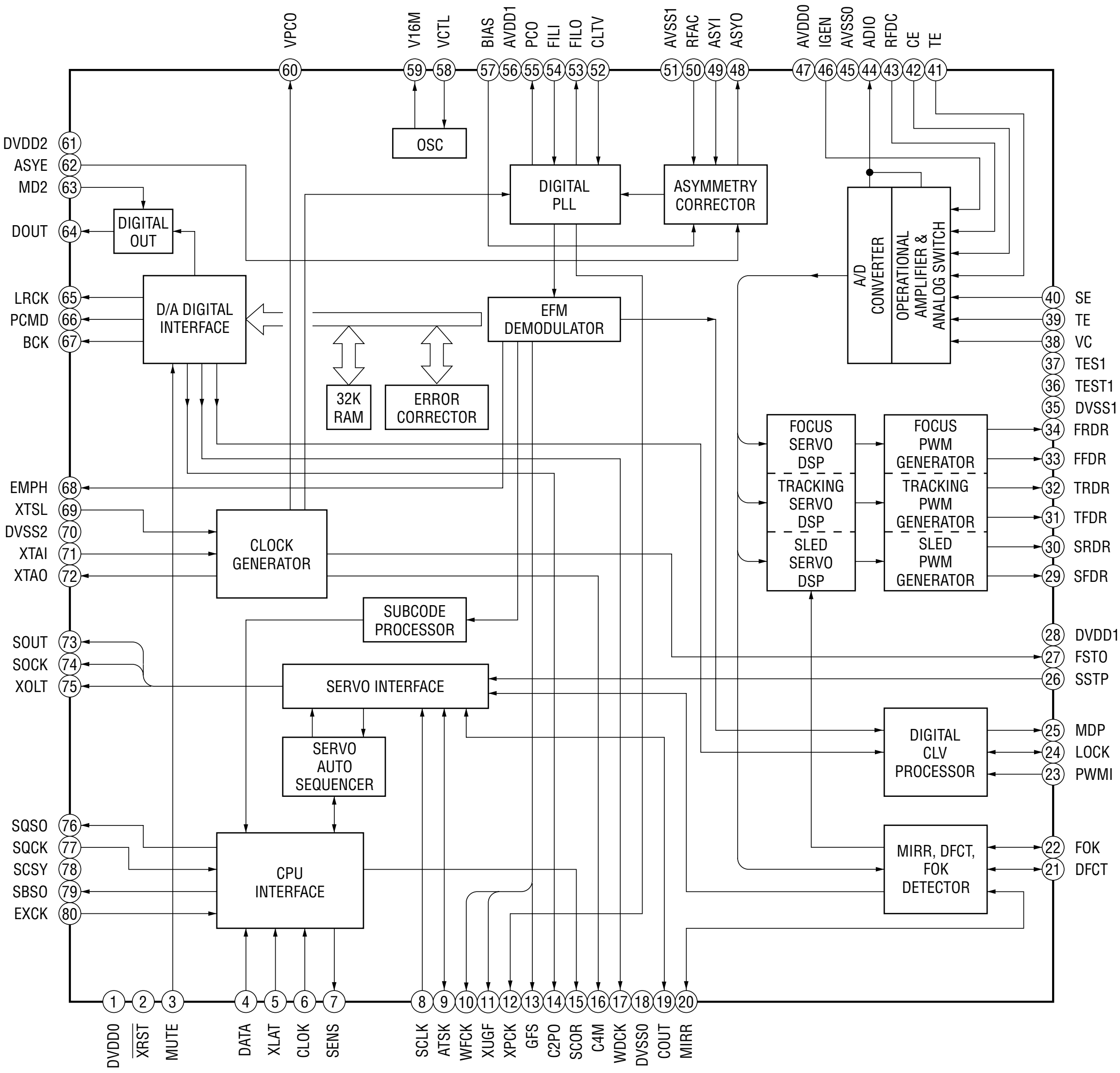

## IC701 CXD1882R

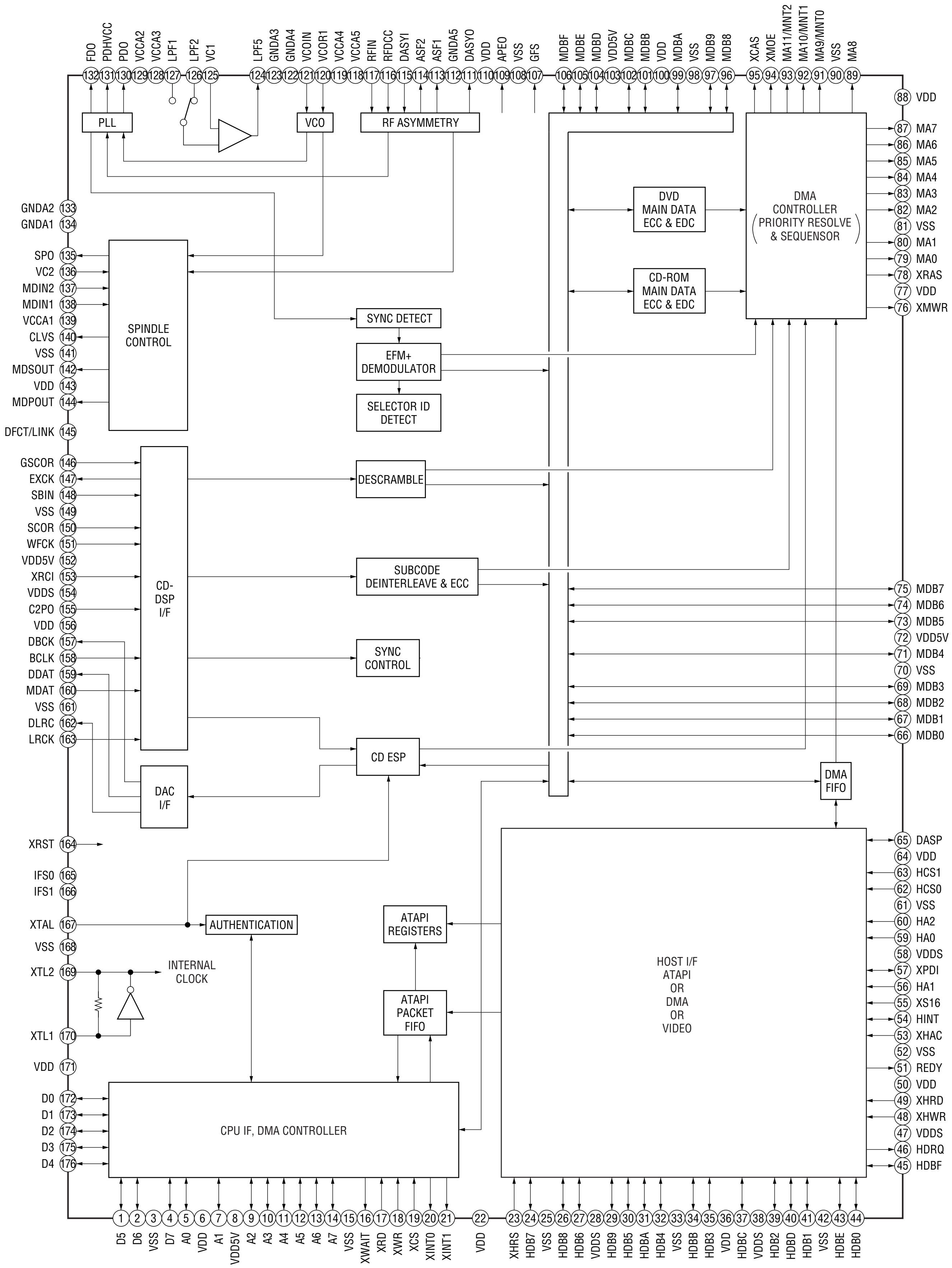

## IC804 CXD2301Q

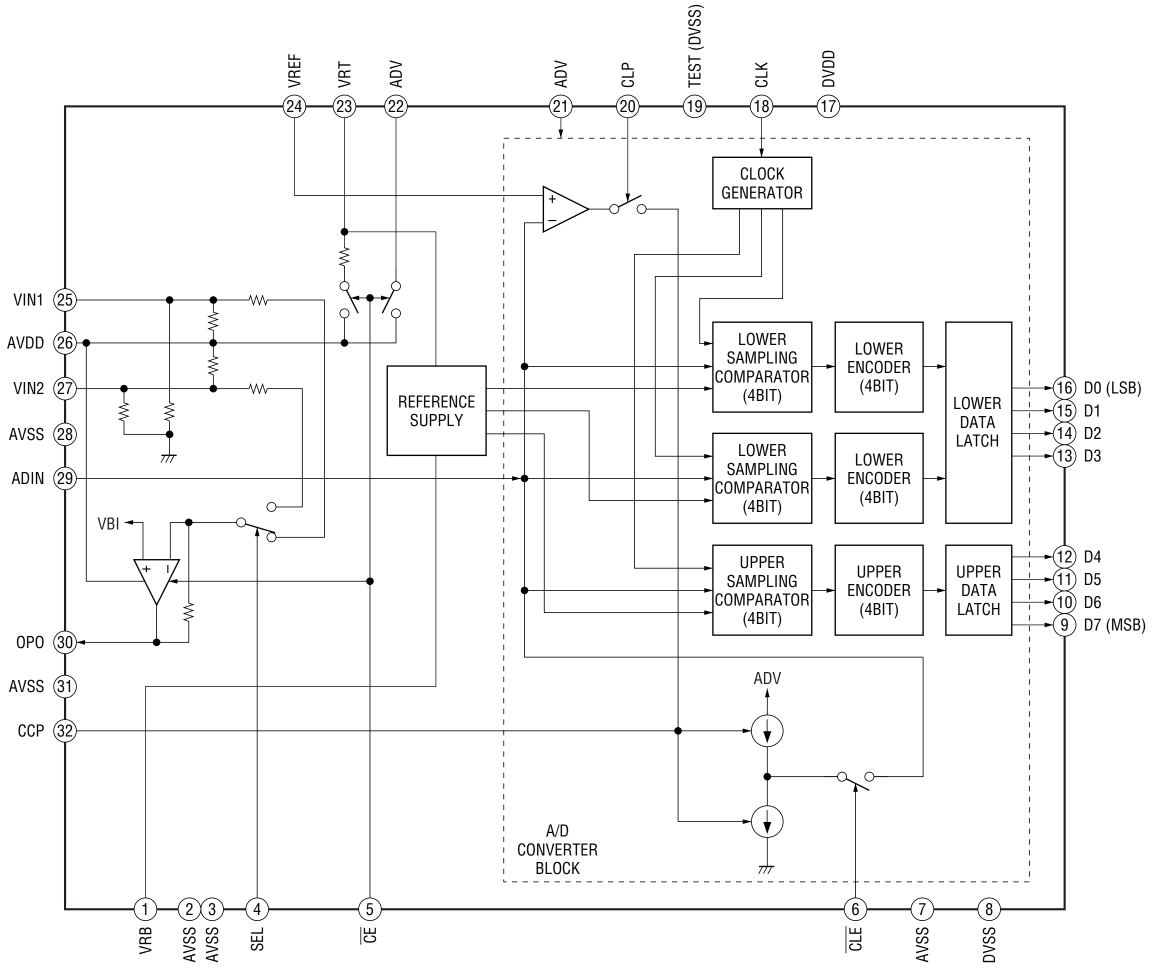


## IC809 SN74LV74APWR

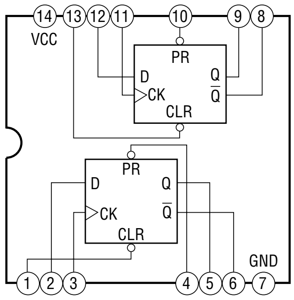


## IC905 M51957BFP-600C

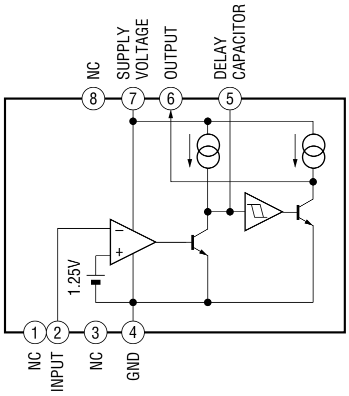

## IC815 TC74VHC164FT (EL)

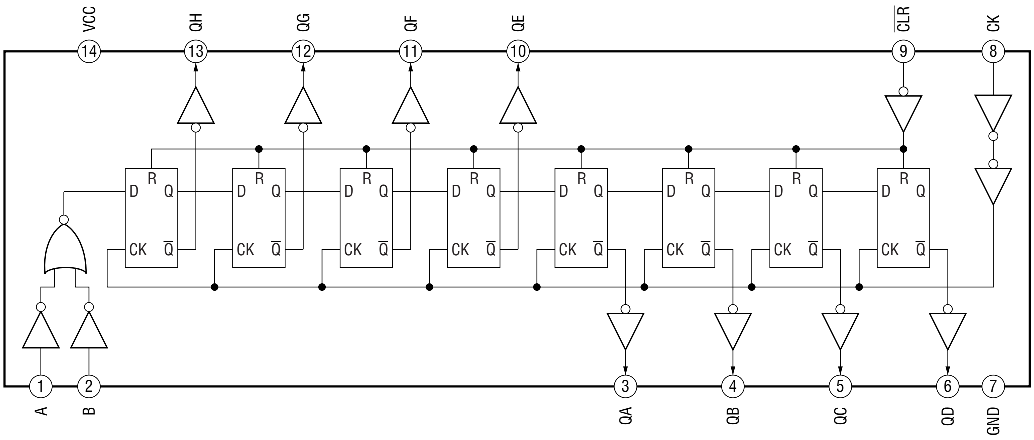


## – AUDIO Board –

## IC904 BU2500FV-E2

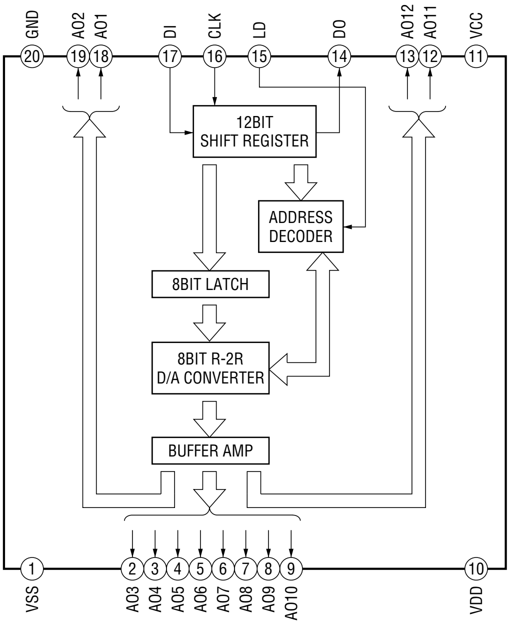


## IC101, 201 CXA8042AS

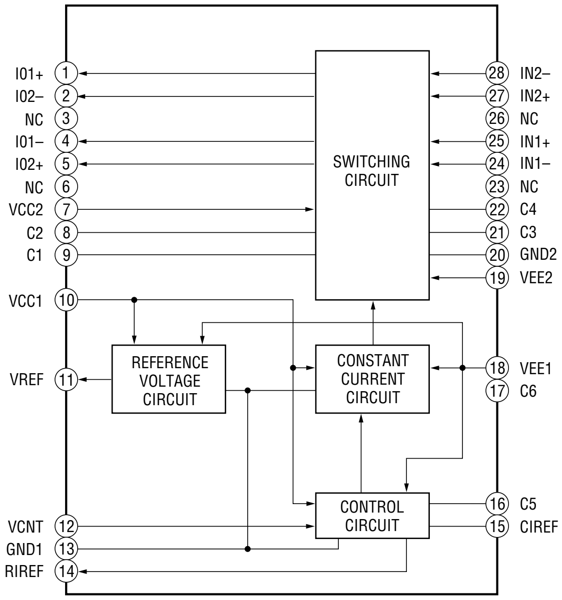

## IC301 CXD8762AQ

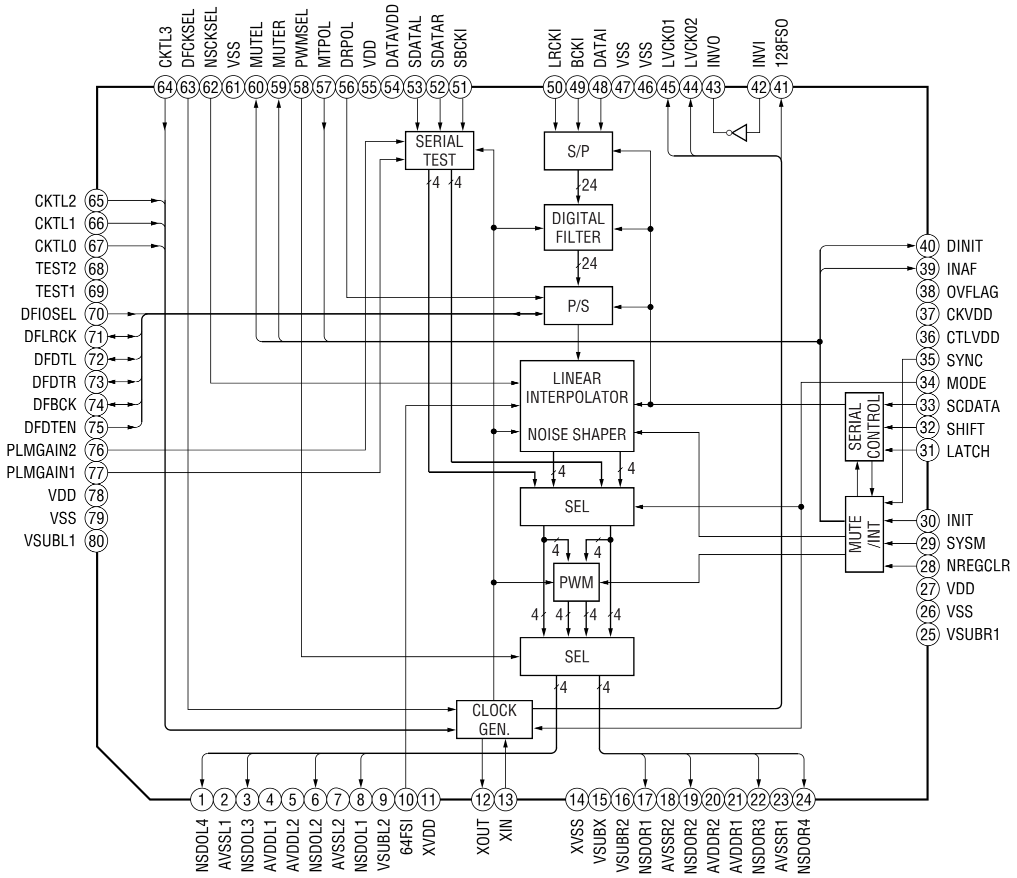


## IC302 CXD9521Q

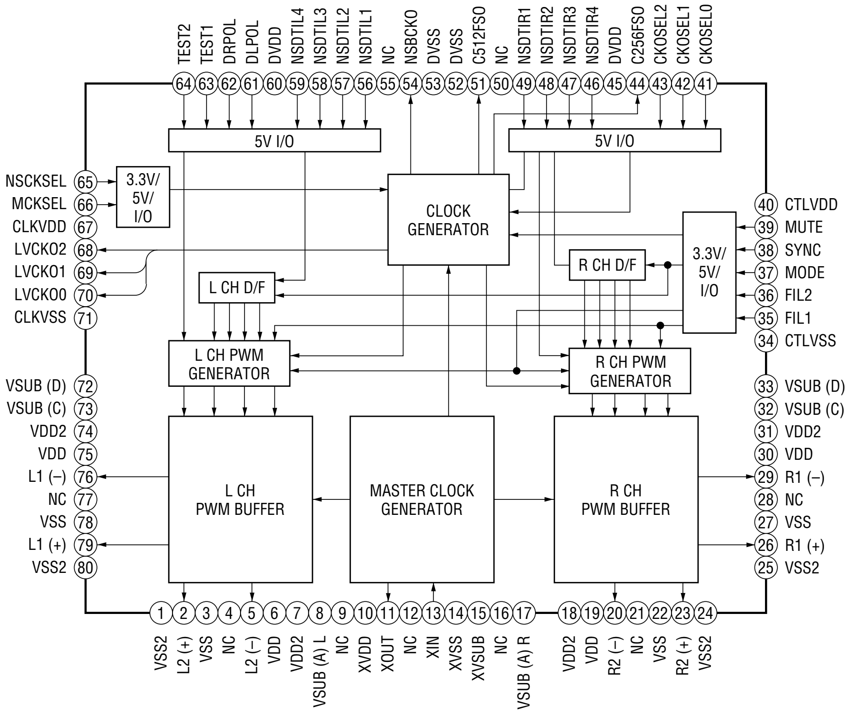

## – DISPLAY Board –

## IC1002 MSM9201-03GS-K

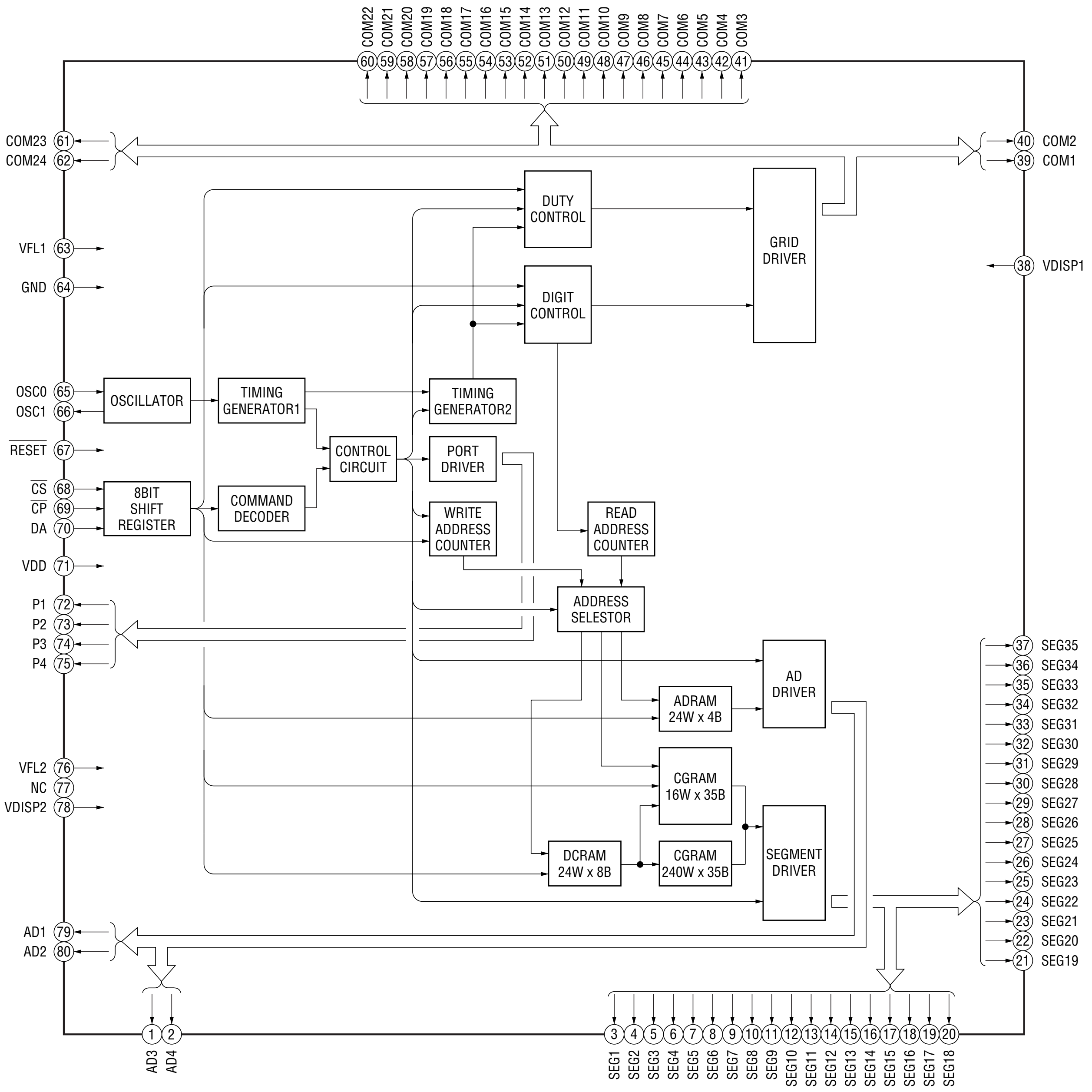

## 4-25. IC PIN FUNCTION DESCRIPTION

• **MAIN BOARD IC509 CXD3008Q**
**(DIGITAL SIGNAL PROCESSOR, DIGITAL SERVO PROCESSOR, DIGITAL FILTER, D/A CONVERTER)**

| Pin No. | Pin Name | I/O | Description |
|---|---|---|---|
| 1 | DVDD0 | — | Power supply terminal (+5V) (digital system) |
| 2 | XRST | I | Reset signal input from the expander (IC902) “L”: reset |
| 3 | MUTE | I | Muting control signal input from the CPU (IC901) “H”: muting |
| 4 | DATA | I | Serial data input from the CPU (IC901) |
| 5 | XLAT | I | Latch signal input from the CPU (IC901) |
| 6 | CLOK | I | Clock signal input from the CPU (IC901) |
| 7 | SENS | O | Internal status (SENSE) signal output to the CPU (IC901) |
| 8 | SCLK | I | Serial data transfer clock input from the CPU (IC901) |
| 9 | ATSK | I | Input pin for anti-shock (fixed at “L”) |
| 10 | WFCK | O | Write frame clock signal output to the SACD decoder (IC701) |
| 11 | XUGF | O | XUGF signal output terminal Not used (open) |
| 12 | XPCK | O | XPCK signal output terminal Not used (open) |
| 13 | GFS | O | Guard frame sync signal output to the CPU (IC901) |
| 14 | C2PO | O | C2 pointer signal output to the SACD decoder (IC701) |
| 15 | SCOR | O | Subcode sync OR signal output to the SACD decoder (IC701) and the CPU (IC901) |
| 16 | C4M | O | 4.2336 MHz clock signal output terminal Not used (open) |
| 17 | WDCK | O | Guard subcode sync OR signal output to the SACD decoder (IC701) |
| 18 | DVSS0 | — | Ground terminal (digital system) |
| 19 | COUT | O | Numbers of track counted signal output to the CPU (IC901) |
| 20 | MIRR | O | Mirror signal output to the CPU (IC901) |
| 21 | DFCT | O | Defect signal output terminal Not used (pull up) |
| 22 | FOK | O | Focus OK signal output to the CPU (IC901) |
| 23 | PWMI | I | Not used (fixed at “L”) |
| 24 | LOCK | O | GFS is sampled by 460 Hz “H” output when GFS is “H” |
| 25 | MDP | O | Spindle motor (M3) servo drive signal output to the SACD decoder (IC701) |
| 26 | SSTP | I | Detection signal input from limit switch (S1) The optical pick-up is inner position when “H” |
| 27 | FSTO | O | 2/3 divider output terminal Not used (open) |
| 28 | DVDD1 | — | Power supply terminal (+5V) (digital system) |
| 29 | SFDR | O | Sled servo drive PWM signal (+) output to the BA5938FP (IC502) |
| 30 | SRDR | O | Sled servo drive PWM signal (–) output to the BA5938FP (IC502) |
| 31 | TFDR | O | Tracking servo drive PWM signal (+) output to the BA5938FP (IC502) |
| 32 | TRDR | O | Tracking servo drive PWM signal (–) output to the BA5938FP (IC502) |
| 33 | FFDR | O | Focus servo drive PWM signal (+) output to the BA5938FP (IC502) |
| 34 | FRDR | O | Focus servo drive PWM signal (–) output to the BA5938FP (IC502) |
| 35 | DVSS1 | — | Ground terminal (digital system) |
| 36 | TEST | I | Input terminal for the test (fixed at “L”) |
| 37 | TES1 | I | Input terminal for the test (fixed at “L”) |
| 38 | VC | I | Middle point voltage (+1.65V) input from the NJM3403AV (IC009) |
| 39 | FE | I | Focus error signal input from the CXD1881R (IC001) |
| 40 | SE | I | Sled error signal input from the CXD1881R (IC001) |
| 41 | TE | I | Tracking error signal input from the CXD1881R (IC001) |
| 42 | CE | I | Chip enable signal input from the CXD1881R (IC001) |
| 43 | RFDC | I | RF signal (DC level) input from the CXD1881R (IC001) |
| 44 | ADIO | O | Output terminal for the A/D converter Not used (open) |

| Pin No. | Pin Name | I/O | Description |
|---|---|---|---|
| 45 | AVSS0 | — | Ground terminal (analog system) |
| 46 | IGEN | I | Stabilized current input for operational amplifiers |
| 47 | AVDD0 | — | Power supply terminal (+5V) (analog system) |
| 48 | ASYO | O | Playback EFM full-swing output terminal |
| 49 | ASYI | I | Playback EFM asymmetry comparator voltage input terminal |
| 50 | RFAC | I | EFM RF signal (AC level) input from the CXD1881R (IC001) |
| 51 | AVSS1 | — | Ground terminal (analog system) |
| 52 | CLTV | I | Internal VCO control voltage input of the EFM playback master PLL |
| 53 | FILO | O | Filter output for master clock of the playback EFM master PLL |
| 54 | FILI | I | Filter input for master clock of the playback EFM master PLL |
| 55 | PCO | O | Phase comparison output for master clock of the playback EFM master PLL |
| 56 | AVDD1 | — | Power supply terminal (+5V) (analog system) |
| 57 | BIAS | I | Playback EFM asymmetry circuit constant current input terminal |
| 58 | VCTL | I | Control voltage input terminal for the variable pitch Not used (fixed at "L") |
| 59 | V16M | O | 16.9344 MHz clock signal output Not used (open) |
| 60 | VPCO | O | PLL charge pump output terminal for the variable pitch Not used (fixed at "L") |
| 61 | DVDD2 | — | Power supply terminal (+5V) (digital system) |
| 62 | ASYE | I | Playback EFM asymmetry circuit on/off selection signal input terminal<br>Not used (fixed at "H") |
| 63 | MD2 | I | Digital out on/off control signal input from the CPU (IC901)<br>"L": digital out on, "H": digital out off |
| 64 | DOUT | O | Digital audio signal output to the DIGITAL (CD) OUT OPTICAL (IC392) |
| 65 | LRCK | O | L/R sampling clock signal (44.1 kHz) output to the digital filter (IC301) and SACD decoder (IC701) |
| 66 | PCMD | O | Serial data output to the digital filter (IC301) and SACD decoder (IC701) |
| 67 | BCLK | O | Bit clock signal (2.8224 MHz) output to the digital filter (IC301) and SACD decoder (IC701) |
| 68 | EMPH | O | Playback disc output terminal in emphasis mode Not used (open) |
| 69 | XTSL | I | Input terminal for the system clock frequency setting Fixed at "H" in this set |
| 70 | DVSS2 | — | Ground terminal (digital system) |
| 71 | XTAI | I | System clock input terminal (33.86688 MHz) |
| 72 | XTAO | O | System clock output terminal (33.86688 MHz) Not used (open) |
| 73 | SOUT | O | Not used (open) |
| 74 | SOCK | O | Not used (open) |
| 75 | XOLT | I | Not used (open) |
| 76 | SQSO | O | Subcode Q data output to the CPU (IC901) |
| 77 | SQCK | I | Subcode Q data reading clock signal input from the CPU (IC901) |
| 78 | SCOR | O | Not used (open) |
| 79 | SBSO | O | Subcode serial data output to the SACD decoder (IC701) |
| 80 | EXCK | I | Subcode serial data reading clock signal input to the SACD decoder (IC701) |

• **MAIN BOARD IC701 CXD1882R (SACD DECODER)**

| Pin No. | Pin Name | I/O | Description |
|---|---|---|---|
| 1, 2 | D5, D6 | I/O | Two-way data bus with the CPU (IC901) and expander (IC902) |
| 3 | VSS | — | Ground terminal (digital system) |
| 4 | D7 | I/O | Two-way data bus with the CPU (IC901) and expander (IC902) |
| 5 | A0 | I | Address signal input from the CPU (IC901) |
| 6 | VDD | — | Power supply terminal (+3.3V) (digital system) |
| 7 | A1 | I | Address signal input from the CPU (IC901) |
| 8 | VDD5V | — | Power supply terminal (+5V) |
| 9 to 14 | A2 to A7 | I | Address signal input from the CPU (IC901) |
| 15 | VSS | — | Ground terminal (digital system) |
| 16 | XWAIT | O | Wait signal output terminal Not used (open) |
| 17 | XRD | I | Read strobe signal input from the CPU (IC901) |
| 18 | XWR | I | Write strobe signal input from the CPU (IC901) |
| 19 | XCS | I | Chip select signal input from the CPU (IC901) |
| 20, 21 | XINT0, XINT1 | O | Interrupt signal output to the CPU (IC901) |
| 22 | VDD | — | Power supply terminal (+3.3V) (digital system) |
| 23 | XHRS | I | Not used (open) |
| 24 | HDB7 | O | Stream data signal output to the DSD decoder (IC801) |
| 25 | VSS | — | Ground terminal (digital system) |
| 26 | HDB8 | O | Error flag signal output to the DSD decoder (IC801) |
| 27 | HDB6 | O | Stream data signal output to the DSD decoder (IC801) |
| 28 | VDDS | — | Power supply terminal (+5V) (digital system) |
| 29 | HDB9 | O | Not used (open) |
| 30 | HDB5 | O | Stream data signal output to the DSD decoder (IC801) |
| 31 | HDBA | O | Not used (open) |
| 32 | HDB4 | O | Stream data signal output to the DSD decoder (IC801) |
| 33 | VSS | — | Ground terminal (digital system) |
| 34 | HDBB | O | Not used (open) |
| 35 | HDB3 | O | Stream data signal output to the DSD decoder (IC801) |
| 36 | VDD | — | Power supply terminal (+3.3V) (digital system) |
| 37 | HDBC | O | Not used (open) |
| 38 | VDDS | — | Power supply terminal (+5V) (digital system) |
| 39 | HDB2 | O | Stream data signal output to the DSD decoder (IC801) |
| 40 | HDBD | O | Not used (open) |
| 41 | HDB1 | O | Stream data signal output to the DSD decoder (IC801) |
| 42 | VSS | — | Ground terminal (digital system) |
| 43 | HDBE | O | Not used (open) |
| 44 | HDB0 | O | Stream data signal output to the DSD decoder (IC801) |
| 45 | HDBF | O | Not used (open) |
| 46 | XACK | O | Serial data transfer acknowledge signal output to the DSD decoder (IC801) |
| 47 | VDDS | — | Power supply terminal (+5V) (digital system) |
| 48 | DCK | O | Serial data transfer clock signal output to the DSD decoder (IC801) |
| 49 | XSHDR0 | O | Header flag signal output to the DSD decoder (IC801) |
| 50 | VDD | — | Power supply terminal (+3.3V) (digital system) |
| 51 | REDY | O | Not used (pull up) |
| 52 | VSS | — | Ground terminal (digital system) |
| 53 | REQUEST | I | Serial data transfer request signal input from the DSD decoder (IC801) |

| Pin No. | Pin Name | I/O | Description |
|---|---|---|---|
| 54 | HINT | O | Not used (pull up) |
| 55 | XS16 | O | Not used (pull up) |
| 56 | HA1 | I | Not used (fixed at “H” ) |
| 57 | XPDI | I/O | Not used (pull up) |
| 58 | VDDS | — | Power supply terminal (+5V) (digital system) |
| 59, 60 | HA0, HA2 | I | Not used (fixed at “H” ) |
| 61 | VSS | — | Ground terminal (digital system) |
| 62, 63 | HCS0, HCS1 | I | Not used (open) |
| 64 | VDD | — | Power supply terminal (+3.3V) (digital system) |
| 65 | DASP | I/O | Not used (pull up) |
| 66 to 69 | MDB0 to MDB3 | I/O | Two-way data bus with the D-RAM (IC706) |
| 70 | VSS | — | Ground terminal (digital system) |
| 71 | MDB4 | I/O | Two-way data bus with the D-RAM (IC706) |
| 72 | VDD5V | — | Power supply terminal (+5V) |
| 73 to 75 | MDB5 to MDB7 | I/O | Two-way data bus with the D-RAM (IC706) |
| 76 | XMWR | O | Write enable signal output to the D-RAM (IC706) |
| 77 | VDD | — | Power supply terminal (+3.3V) (digital system) |
| 78 | XRAS | O | Row address strobe signal output to the D-RAM (IC706) |
| 79, 80 | MA0, MA1 | O | Address signal output to the D-RAM (IC706) |
| 81 | VSS | — | Ground terminal (digital system) |
| 82 to 87 | MA2 to MA7 | O | Address signal output to the D-RAM (IC706) |
| 88 | VDD | — | Power supply terminal (+3.3V) (digital system) |
| 89 | MA8 | O | Address signal output to the D-RAM (IC706) |
| 90 | VSS | — | Ground terminal (digital system) |
| 91 | MA9/MNT0 | O | Address signal output to the D-RAM (IC706) |
| 92 | MA10/MNT1 | O | RF data signal output terminal for disc mark detection |
| 93 | MA11/MNT2 | O | Clock signal output terminal for disc mark detection<br>Monitor signal output to the CPU (IC901) |
| 94 | XMOE | O | Output enable signal output to the D-RAM (IC706) |
| 95 | XCAS | O | Column address strobe signal output to the D-RAM (IC706) |
| 96, 97 | MDB8, MDB9 | I/O | Two-way data bus with the D-RAM (IC706) |
| 98 | VSS | — | Ground terminal (digital system) |
| 99 | MDBA | I/O | Two-way data bus with the D-RAM (IC706) |
| 100 | VDD | — | Power supply terminal (+3.3V) (digital system) |
| 101, 102 | MDBB, MDBC | I/O | Two-way data bus with the D-RAM (IC706) |
| 103 | VDD5V | — | Power supply terminal (+5V) |
| 104 to 106 | MDBD to MDBF | I/O | Two-way data bus with the D-RAM (IC706) |
| 107 | GFS | O | Guard frame sync signal output to the CPU (IC901) |
| 108 | VSS | — | Ground terminal (digital system) |
| 109 | APEO | O | Absolute phase error signal output |
| 110 | VDD | — | Power supply terminal (+3.3V) (digital system) |
| 111 | DASYO | O | RF binary signal output |
| 112 | GNDA5 | — | Ground terminal (analog system) |
| 113, 114 | ASF1, AFS2 | — | Filter connected terminal for selection the constant asymmetry compensation |
| 115 | DASYI | I | Analog signal input after integrated from the RF binary signal |
| 116 | RFDCC | I | Input terminal for adjusting DC cut high-pass filter for RF signal |
| 117 | RF IN | I | RF signal input from the CXD1881R (IC001) |

| Pin No. | Pin Name | I/O | Description |
|---|---|---|---|
| 118, 119 | VCCA5, VCCA4 | — | Power supply terminal (+3.3V) (analog system) |
| 120 | VCOR1 | — | VCO oscillating range setting resistor connected terminal |
| 121 | VCOIN | I | VCO input terminal |
| 122, 123 | GNDA4, GNDA3 | — | Ground terminal (analog system) |
| 124 | LPF5 | O | Signal output from the operation amplifier from PLL loop filter |
| 125 | VC1 | I | Middle point voltage (+1.65V) input terminal |
| 126, 127 | LPF2, LPF1 | I | Inverted signal input to the operation amplifier from PLL loop filter |
| 128, 129 | VCCA3, VCCA2 | — | Power supply terminal (+3.3V) (analog system) |
| 130 | PDO | O | Signal output from the charge pump for phase comparator |
| 131 | PDHVCC | I | Middle point voltage input terminal for RF PLL |
| 132 | FDO | O | Signal output from the charge pump for frequency comparator |
| 133, 134 | GNDA2, GNDA1 | — | Ground terminal (analog system) |
| 135 | SPO | O | Spindle motor (M3) control signal output to the BA5912AFP (IC512) |
| 136 | VC2 | I | Middle point voltage (+1.65V) input terminal |
| 137 | MDIN2 | I | Spindle motor (M3) control signal input from the CXD3008Q (IC509) |
| 138 | MDIN1 | I | MDP input terminal |
| 139 | VCCA1 | — | Power supply terminal (+3.3V) (analog system) |
| 140 | CLVS | O | Control signal output for selection the spindle control filter at CLVS |
| 141 | VSS | — | Ground terminal (digital system) |
| 142 | MDSOUT | O | Frequency error output terminal of internal CLV circuit |
| 143 | VDD | — | Power supply terminal (+3.3V) (digital system) |
| 144 | MDPOUT | O | Phase error output terminal of internal CLV circuit |
| 145 | DEFECT | I | Defect signal input terminal Not used (fixed at “L” ) |
| 146 | GSCOR | I | Guard subcode sync OR signal input from the CXD3008Q (IC509) |
| 147 | EXCK | O | Subcode serial data reading clock signal output to the CXD3008Q (IC509) |
| 148 | SBIN | I | Subcode serial data input from the CXD3008Q (IC509) |
| 149 | VSS | — | Ground terminal (digital system) |
| 150 | SCOR | I | Subcode sync OR signal input from the CXD3008Q (IC509) |
| 151 | WFCK | I | Write frame clock signal input from the CXD3008Q (IC509) |
| 152 | VDD5V | — | Power supply terminal (+5V) |
| 153 | XRCI | I | RAM overflow signal input terminal Not used (fixed at “L” ) |
| 154 | VDDS | — | Power supply terminal (+5V) (digital system) |
| 155 | C2PO | I | C2 pointer signal input from the CXD3008Q (IC509) |
| 156 | VDD | — | Power supply terminal (+3.3V) (digital system) |
| 157 | DBCK | O | Bit clock signal (2.8224 MHz) output terminal Not used (open) |
| 158 | BCLK | I | Bit clock signal (2.8224 MHz) input from the CXD3008Q (IC509) |
| 159 | DDAT | O | PCM data output terminal Not used (open) |
| 160 | MDAT | I | Serial data input from the CXD3008Q (IC509) |
| 161 | VSS | — | Ground terminal (digital system) |
| 162 | DLRC | O | L/R sampling clock signal (44.1 kHz) output terminal Not used (open) |
| 163 | LRCK | I | L/R sampling clock signal (44.1 kHz) input from the CXD3008Q (IC509) |
| 164 | XRST | I | Reset signal input from the expander (IC902) “L”: reset |
| 165 | IFS0 | I | Interface select signal input terminal Fixed at “L” in this set |
| 166 | IFS1 | I | Interface select signal input terminal Fixed at “H” in this set |
| 167 | XTAL | I | 33.86688 MHz clock signal input terminal |
| 168 | VSS | — | Ground terminal (digital system) |
| 169 | XTA2 | O | System clock output terminal (33.86688 MHz) |

| Pin No. | Pin Name | I/O | Description |
|---|---|---|---|
| 170 | XTA1 | I | System clock input terminal (33.86688 MHz) |
| 171 | VDD | — | Power supply terminal (+3.3V)  (digital system) |
| 172 to 176 | D0 to D4 | I/O | Two-way data bus with the CPU (IC901) and expander (IC902) |

• **MAIN BOARD IC801 CXD2751Q (DSD DECODER)**

| Pin No. | Pin Name | I/O | Description |
|---|---|---|---|
| 1 | XSRQ | O | Serial data transfer request signal output to the SACD decoder (IC701) |
| 2 | XSHD | I | Header flag signal input from the SACD decoder (IC701) |
| 3 | VDD | — | Power supply terminal (+3.3V) (digital system) |
| 4 | VSS | — | Ground terminal (digital system) |
| 5 | SDCK | I | Serial data transfer clock signal input from the SACD decoder (IC701) |
| 6 | $\overline{\text{SMUTE}}$ | I | Muting signal input from the CPU (IC901) “L”: muting |
| 7 | XMSLAT | I | Latch signal input from the CPU (IC901) |
| 8 | MSCK | I | Serial data transfer clock signal input from the CPU (IC901) |
| 9 | MSDATI | I | Serial data input from the CPU (IC901) |
| 10 | MSDATO | O | Serial data output to the CPU (IC901) |
| 11 | $\overline{\text{MSREDY}}$ | I | Ready signal input from the CPU (IC901) “L”: ready |
| 12 | XMSDOE | O | Data enable signal output terminal Not used (open) |
| 13 | XRST | I | Reset signal input from the expander (IC902) “L”: reset |
| 14 | MCKI | I | Master clock signal input terminal |
| 15 | VSS | — | Ground terminal (digital system) |
| 16 | CK75S | I | Master clock selection signal input terminal “L”: 512fs, “H”: 768fs (fixed at “H” in this set) |
| 17 | EXCKO1 | O | External clock 1 signal output terminal |
| 18 | EXCKO2 | O | External clock 2 signal output terminal Not used (open) |
| 19 | LRCK | I/O | L/R sampling clock signal (44.1kHz) input/output terminal Not used (open) |
| 20 | UBIT | — | Not used (open) |
| 21 | MNT2 | O | Monitor 2 signal output terminal Not used (open) |
| 22 | $\overline{\text{TRST}}$ | I | Reset signal input terminal “L”: reset Not used (fixed at “L”) |
| 23 | TCK | I | Clock signal input terminal for test (normally: fixed at “L”) |
| 24 | TDI | I | Serial data input terminal for test (normally: open) |
| 25 | TENA1 | I | Enable signal input terminal for test (normally: open) |
| 26 | TDO | O | Serial data output terminal for test (normally: open) |
| 27 | VST | — | Ground terminal for test (digital system) |
| 28 | VDD | — | Power supply terminal (+3.3V) (digital system) |
| 29 | VSS | — | Ground terminal (digital system) |
| 30 | MNT1 | O | Monitor 1 signal output terminal Not used (open) |
| 31 | MNT0 | O | Monitor 0 signal output terminal Not used (open) |
| 32 | XBIT | O | Bit clock signal (2.8224 MHz) output terminal Not used (open) |
| 33 | F75HZ | O | Clock signal (75 Hz) output terminal Not used (open) |
| 34 | SUPDAT | O | Serial data output terminal Not used (open) |
| 35 | SUPAK | O | Acknowledge signal output terminal Not used (open) |
| 36 | SUPEN | O | Enable signal output terminal Not used (open) |
| 37 | TEST1 | I | Test 1 signal input terminal for test (normally: fixed at “L”) |
| 38 | VSS | — | Ground terminal (digital system) |
| 39 | TEST2 | I | Test 2 signal input terminal for test (normally: fixed at “L”) |
| 40, 41 | VSS | — | Ground terminal (digital system) |
| 42 | BCKD | I | Shift clock signal input from the digital filter (IC301) |
| 43 | DSDL | — | Not used (open) |
| 44 | DSDR | — | Not used (open) |
| 45 | MUDAT | — | Not used (open) |
| 46 | BCKA | I | Shift clock signal input from the digital filter (IC301) |
| 47 | DSAL | O | DSD data (Lch) output to the digital filter (IC301) |

| Pin No. | Pin Name | I/O | Description |
|---|---|---|---|
| 48 | DSAR | O | DSD data (Rch) output to the digital filter (IC301) |
| 49 | ZDFLGL | O | Data (Lch) flag detection signal output terminal Not used (open) |
| 50 | ZDFLGR | O | Data (Rch) flag detection signal output terminal Not used (open) |
| 51, 52 | A0, A1 | O | Address signal output to the D-RAM (IC808) |
| 53 | VDD | — | Power supply terminal (+3.3V) (digital system) |
| 54 | VSS | — | Ground terminal (digital system) |
| 55 to 63 | A2 to A10 | O | Address signal output to the D-RAM (IC808) |
| 64 | NC | — | Not used (open) |
| 65 | VSS | — | Ground terminal (digital system) |
| 66 | XWE | O | Write enable signal output to the D-RAM (IC808) |
| 67 | XCAS | O | Column address strobe signal output to the D-RAM (IC808) |
| 68 | XRAS | O | Row address strobe signal output to the D-RAM (IC808) |
| 69 | XOE | O | Output enable signal output to the D-RAM (IC808) |
| 70 to 77 | DQ0 to DQ7 | I/O | Two-way data bus with the D-RAM (IC808) |
| 78 | VDD | — | Power supply terminal (+3.3V) (digital system) |
| 79 | VSS | — | Ground terminal (digital system) |
| 80 | WCK | I | Clock signal input terminal for disc mark detection |
| 81 | WRFD | I | RF data signal input terminal for disc mark detection |
| 82 to 89 | WAD0 to WAD7 | I | A/D data signal input from the A/D converter (IC804) for disc mark detection |
| 90 | VSS | — | Ground terminal (digital system) |
| 91 to 98 | SD7 to SD0 | I | Stream data signal input from the SACD decoder (IC701) |
| 99 | SDEF | I | Error flag signal input from the SACD decoder (IC701) |
| 100 | XSAK | I | Serial data transfer acknowledge signal input from the SACD decoder (IC701) |

• **MAIN BOARD IC901 CXP973F064R-1 (CPU)**

| Pin No. | Pin Name | I/O | Description |
|---|---|---|---|
| 1 | MODE DF | O | SACD/CD mode selection signal output to the digital filter (IC301) and D/A converter (IC302)<br>"L": CD mode, "H": SACD mode |
| 2 | AMUTE | O | Muting signal output to the analog line circuit "H": muting |
| 3 | DOCTRL | O | Digital out on/off control signal output to the CXD3008Q (IC509)<br>"L": digital out off, "H": digital out on |
| 4 | LAT DAC | O | Latch signal output to the D/A converter (IC904) |
| 5 | DATA DAC | O | Serial data output to the D/A converter (IC904) |
| 6 | CLK DAC | O | Clock signal output to the D/A converter (IC904) |
| 7 | FCS JMP 1 | O | Focus jump 1 signal output to the BA5983FP (IC502) |
| 8 | FCS JMP 2 | O | Focus jump 2 signal output to the BA5983FP (IC502) |
| 9 | SENS CD | I | Internal status (SENSE) signal input from the CXD3008Q (IC509) |
| 10 | XCS DRAM | O | Chip select signal output terminal Not used (pull up) |
| 11 | XCS IO | O | Chip select signal output to the expander (IC902) |
| 12 | XCS DVD | O | Chip select signal output to the SACD decoder (IC701) |
| 13 | VSS | — | Ground terminal (digital system) |
| 14 to 21 | D0 to D7 | I/O | Two-way data bus with the SACD decoder (IC701) and expander (IC902) |
| 22 | INT0 DVD | I | Interrupt signal input from the SACD decoder (IC701) |
| 23 | INT1 DVD | I | Interrupt signal input from the SACD decoder (IC701) |
| 24 | T SENS | I | Disc tray status detection signal input terminal Not used (open) |
| 25 | MON DVD | I | Monitor signal input from the SACD decoder (IC701) |
| 26 | DATA CD | O | Serial data output to the CXD3008Q (IC509) |
| 27 | XLAT CD | O | Latch signal output to the CXD3008Q (IC509) |
| 28 | A1IN | I | Control A1 signal input terminal Not used (fixed at "H") |
| 29 | CONT CD | I | Numbers of track counted signal input from the CXD3008Q (IC509) |
| 30 | $\overline{\text{IN SW}}$ | I | Loading in switch (S001) input terminal "L": loading in |
| 31 | $\overline{\text{OUT SW}}$ | I | Loading out switch (S002) input terminal "L": loading out |
| 32 | MIRR RF | I | Mirror signal input from the CXD3008Q (IC509) |
| 33 | SUBQ CD | I | Subcode Q data input from the CXD3008Q (IC509) |
| 34 | SCOR CD | I | Subcode sync OR signal input from the CXD3008Q (IC509) |
| 35 | SQCLK CD | O | Subcode Q data reading clock signal output to the CXD3008Q (IC509) |
| 36 | — | — | Not used (open) |
| 37 | CLOK CD | O | Clock signal output to the CXD3008Q (IC509) |
| 38 | XRST | I | System reset signal input from the reset signal generator (IC905) "L": reset<br>For several hundreds msec. after the power supply rises, "L" is input, then it changes to "H" |
| 39 | VSS | — | Ground terminal (digital system) |
| 40 | XTAL | I | System clock input terminal (20 MHz) |
| 41 | EXTAL | O | System clock output terminal (20 MHz) |
| 42 | VDD | — | Power supply terminal (+3.3V) (digital system) |
| 43 | LDON RF | O | Laser diode on/off control signal output to the CXD1881R (IC001)<br>"L": laser diode off, "H": laser diode on |
| 44 | XDIS IO | O | Reset signal output to the expander (IC902) "L": reset |
| 45 | $\overline{\text{MUTE DSD}}$ | O | Muting signal output to the DSD decoder (IC801) "L": muting |
| 46 | XLAT DSD | O | Latch signal output to the DSD decoder (IC801) |
| 47 | $\overline{\text{READY DSD}}$ | O | Ready signal output to the DSD decoder (IC801) "L": ready |
| 48 | SDIN DSD | I | Serial data input from the DSD decoder (IC801) |
| 49 | SOUT DSD | O | Serial data output to the DSD decoder (IC801) |

| Pin No. | Pin Name | I/O | Description |
|---|---|---|---|
| 50 | SCK DSD | O | Serial data transfer clock signal output to the DSD decoder (IC801) |
| 51 | BUSY DP | I | Busy signal input from the CXP84120 (IC1001) |
| 52 | SIN DP | I | Serial data input from the CXP84120 (IC1001) |
| 53 | SOUT DP | O | Serial data output to the CXP84120 (IC1001) |
| 54 | SCLK DP | O | Serial data transfer clock signal output to the CXP84120 (IC1001) |
| 55 | VSS | — | Ground terminal (digital system) |
| 56 | REQ DP | O | Request signal output to the CXP84120 (IC1001) |
| 57 | FCS BST | O | Focus boost signal output terminal Not used (open) |
| 58 | GFS DVD | I | Guard frame sync signal input from the SACD decoder (IC701) |
| 59 | MUTE CD | O | Muting signal output to the CXD3008Q (IC509) “H”: muting |
| 60 | MUTE 2D | O | Muting signal output to the BA5938FP (IC502) |
| 61 | MUTE LOAD | O | Muting signal output to the BA5912AFP (IC512) |
| 62 | FG | I | FG signal input terminal Not used (open) |
| 63 | MUTE SP | O | Muting signal output to the BA5912AFP (IC512) |
| 64 | JITTER | I | Jitter signal input terminal |
| 65 | TE | I | Tracking error signal input from the CXD1881R (IC001) |
| 66 | MON RF | I | Monitor signal input from the CXD1881R (IC001) |
| 67 | FE | I | Focus error signal input from the CXD1881R (IC001) |
| 68 | AVSS | — | Ground terminal (for A/D converter) |
| 69 | AVREF | I | Reference voltage input terminal (for A/D converter) |
| 70 | AVDD | — | Power supply terminal (+3.3V) (for A/D converter) |
| 71 | GFS CD | I | Guard frame sync signal input from the CXD3008Q (IC509) |
| 72 | SCLK CD | O | Serial data transfer clock signal output to the CXD3008Q (IC509) |
| 73 | DFCT CD | I | Defect signal input terminal Not used (open) |
| 74 | FOK CD | I | Focus OK signal input from the CXD3008Q (IC509) |
| 75 | LOCK CD | I | GFS sampled by 460 Hz “H” input when GFS is “H” |
| 76 | XRF AD CE | O | Chip enable signal output to the A/D converter (IC804) |
| 77 | DFCT SW | O | Defect selection signal output terminal |
| 78 | EEPSIO | I/O | Two-way data bus with the EEPROM (IC903) |
| 79 | EEPSCL | O | Clock signal output to the EEPROM (IC903) |
| 80 | SIN PC | I | Serial data input from the RS-232C (for check) |
| 81 | SOUT PC | O | Serial data output to the RS-232C (for check) |
| 82 | SCLK RF | I | Clock signal input from the CXD1881R (IC001) |
| 83 | SDATA RF | I/O | Two-way data bus with the CXD1881R (IC001) |
| 84 | XWR | O | Write strobe signal output to the SACD decoder (IC701) and expander (IC902) |
| 85 | XRD | O | Read strobe signal output to the SACD decoder (IC701) and expander (IC902) |
| 86 | NC | — | Not used (fixed at “H” ) |
| 87 | VDD | — | Power supply terminal (+3.3V) (digital system) |
| 88 | VSS | — | Ground terminal (digital system) |
| 89 to 91 | A0 to A2 | O | Address signal output to the SACD decoder (IC701) and expander (IC902) |
| 92 to 96 | A3 to A7 | O | Address signal output to the SACD decoder (IC701) |
| 97 | INIT DF | O | Initial signal output to the digital filter (IC301) |
| 98 | LATCH DF | O | Latch signal output to the digital filter (IC301) |
| 99 | SHIFT DF | O | Shift signal output to the digital filter (IC301) |
| 100 | SCDATA DF | O | Serial data output to the digital filter (IC301) |

- **MAIN BOARD IC902 CXD1095BR (EXPANDER)**

| Pin No. | Pin Name | I/O | Description |
|---|---|---|---|
| 1 | LIM SW | I | Detection signal input terminal from limit switch   Not used (open) |
| 2 | (WISE) | I | Not used (open) |
| 3 | F COMPL | I | Focus jump low level signal input terminal   Not used (open) |
| 4, 5 | SPCNTL1, SPTNCL0 | O | Spindle motor control signal output terminal   Not used (open) |
| 6 | TBLL | O | Table motor drive signal (counterclockwise direction) output terminal   Not used (open) |
| 7 | TBLR | O | Table motor drive signal (clockwise direction) output terminal   Not used (open) |
| 8 | VSS | — | Ground terminal (digital system) |
| 9 | REMCODE | I | Remote category signal output terminal   Not used (open) |
| 10 | D SENS | I | Disc status detection signal input terminal   Not used (open) |
| 11, 12 | S1, S2 | I | Disc tray position detection signal input terminal   Not used (open) |
| 13 | LOAD OUT | O | Loading motor drive signal (loading out direction) output terminal   Not used (open) |
| 14 | SDCNTL | O | Sled motor control signal output terminal   Not used (open) |
| 15 | LOAD IN | O | Loading motor drive signal (loading in direction) output terminal   Not used (open) |
| 16 | A1OUT | O | Control A1 signal output terminal   Not used (open) |
| 17 | NC | — | Not used (open) |
| 18 | $\overline{\text{RST DSD}}$ | O | Reset signal output to the DSD decoder (IC801)   “L”: reset |
| 19 | $\overline{\text{RST DP}}$ | O | Reset signal output to the CXP84120 (IC1001)   “L”: reset |
| 20 | $\overline{\text{RST DVD}}$ | O | Reset signal output to the SACD decoder (IC701)   “L”: reset |
| 21 | $\overline{\text{RST CD}}$ | O | Reset signal output to the CXD30008Q (IC509)   “L”: reset |
| 22 | VMOD | O | Power on/off control signal output for modulation circuit on optical pick-up block<br>“L”: power off, “H”: power on |
| 23 | VSS | — | Ground terminal (digital system) |
| 24 | VDD | — | Power supply terminal (+3.3V) |
| 25 | MULTI | O | Multi/2ch selection signal output terminal   “L”: 2ch, “H”: multi   Not used (open) |
| 26 | SDEN | O | Serial enable signal output to CXD1881R (IC001) |
| 27 | ISBTEST | O | Output terminal for disc inspection mode   Not used (open) |
| 28 to 30 | D0 to D2 | I/O | Two-way data bus with the SACD decoder (IC701) and the CPU (IC901) |
| 31, 32 | NC | — | Not used (open) |
| 33 to 37 | D3 to D7 | I/O | Two-way data bus with the SACD decoder (IC701) and the CPU (IC901) |
| 38 | XCLR | I | Clear signal input terminal   Not used (fixed at “H”) |
| 39 | XDIS | I | Reset signal input from the CPU (IC901)   “L”: reset |
| 40 | VSS | — | Ground terminal (digital system) |
| 41 | XWR | I | Write strobe signal input from the CPU (IC901) |
| 42 | XRD | I | Read strobe signal input from the CPU (IC901) |
| 43 | XCS | I | Chip select signal input from the CPU (IC901) |
| 44 to 46 | A0 to A2 | I | Address signal input from the CPU (IC901) |
| 47, 48 | PE0, PE1 | — | Not used (open) |
| 49 | NC | — | Not used (open) |
| 50 | TRKFIL | O | Tracking filter signal output terminal   Not used (open) |
| 51 | PE3 | — | Not used (open) |
| 52 | 12V ON | O | Control signal output terminal for low-energy mode   Not used (fixed at “H”) |
| 53 | PA1 | — | Not used (open) |
| 54 | CD SACD | O | SACD/CD mode selection signal output terminal   Not used (open) |
| 55 | VSS | — | Ground terminal (digital system) |
| 56 | VDD | — | Power supply terminal (+3.3V) (digital system) |

| Pin No. | Pin Name | I/O | Description |
|---|---|---|---|
| 57 | AGING ERR | O | Debug flag signal output terminal    Not used (open) |
| 58 | PA4 | — | Not used (open) |
| 59 | OUT SW | I | Disc tray out detection signal input terminal    Not used (open) |
| 60, 61 | PA6, PA7 | — | Not used (open) |
| 62 | F COMPH | I | Focus jump high level signal input terminal    Not used (open) |
| 63, 64 | NC | — | Not used (open) |

# SECTION 5
# SERVICING NOTES (2)

### Cleaning of Optical Pick-up Lens

In cleaning the lens of optical pick-up, use the air blower.
Never use a cotton swab for cleaning the lens of optical pick-up, which otherwise causes a trouble.

### Resetting Operation at Power ON

If the power is turned on with a disc loaded in the set, a sequence of operation as shown below will be performed.
(The operation varies depending on the type of disc) Condition: continue mode

(1) CD

1. Sled reverse move (sled in)
2. Disc detect
3. IC setting for CD
4. Servo error signal offset auto adjustment
5. Spindle kick for LD on
6. LD on
7. Focus search
8. Focus servo on
9. Spindle kick
10. Spindle servo on
11. E-F balance auto adjustment
12. Tracking & sled servo on
13. Focus bias auto adjustment
14. Focus servo gain auto adjustment
15. Tracking servo gain auto adjustment
16. Jump to lead-in area
17. Read TOC
18. Auto play (track No.1)

(2) SACD (single layer)

1. Sled reverse move (sled in)
2. Disc detect
3. IC setting for SACD
4. Servo error signal offset auto adjustment
5. Spindle kick for LD on
6. LD on
7. Focus search
8. Focus servo on
9. Spindle kick
10. Spindle servo on
11. E-F balance auto adjustment
12. Tracking & sled servo on
13. Focus bias auto adjustment
14. Focus servo gain auto adjustment
15. Tracking servo gain auto adjustment
16. Jump to lead-in area
17. Read TOC
18. Auto play (track No.1)

(3) SACD (dual layer)

1. Sled reverse move (sled in)
2. Disc detect
3. IC setting for SACD
4. Servo error signal offset auto adjustment
5. Spindle kick for LD on
6. LD on
7. Focus search
8. Focus servo on (layer 0)
9. Spindle kick
10. Spindle servo on
11. E-F balance auto adjustment (layer 0)
12. Tracking & sled servo on (layer 0)
13. Focus bias auto adjustment (layer 0)
14. Focus servo gain auto adjustment (layer 0)
15. Tracking servo gain auto adjustment (layer 0)
16. Jump to lead-in area
17. Read TOC
18. Focus jump (layer 0→layer 1)
19. E-F balance auto adjustment (layer 1)
20. Tracking & sled servo on (layer 1)
21. Focus bias auto adjustment (layer 1)
22. Focus servo gain auto adjustment (layer 1)
23. Tracking servo gain auto adjustment (layer 1)
24. Focus Jump (layer 1→layer 0)
25. Auto play (track No.1)

# SECTION 6
# TEST MODE

This set automatically executes self-diagnosis and various checks by entering the test mode.

**Note:** This set automatically makes various adjustments according to the type of disc, thereby not requiring adjustment of the set when parts were replaced. However, be sure to execute 6-1. IC AND FLUORESCENT DISPLAY TUBE CHECK, 6-2. AUTO CHECK and 6-7. WAVEFORMS CHECK.

### Disc for Test Mode

Various checks of this set require the following discs.

| Model | Type *1 | Category | Application |
|---|---|---|---|
| SATD-04 (J-2501-184-A) | SL | 12 cm disc Reference disc | Adjusted value check, Operation check, Optical waveform check |
| Not specified | DL | 12 cm disc | Operation check |
| PATD-012 (4-225-203-01) YEDS-18 (3-702-101-01) | CD | 12 cm disc Reference disc | Adjusted value check, Operation check, Optical waveform check |
| Not specified | HYBRID | 12 cm disc | Operation check |

*1 SL: Single Layer
DL: Dual Layer

### Setting Method of Test Mode

Turn the [POWER] switch on while pressing the [⏮AMS⏭] dial and the [TIME/TEXT] button. Release the [TIME/TEXT] button and the [⏮ AMS ⏭] dial in this order when “TEST MODE Menu” is displayed on the fluorescent display tube. (If the [⏮AMS⏭] dial is released first, the test mode becomes active but “TEST MODE Menu” is not displayed)

### Releasing Method of Test Mode

To release the test mode, turn the [POWER] switch off.

### Selection/Entry of Test Mode

To select and enter the “TEST MODE Menu”, operate as follows.

1. Rotate the [⏮ AMS ⏭] dial to select the menu, and press the [⏮ AMS ⏭] dial to enter.
2. The test is switched on or off alternately each time the [⏮ AMS ⏭] dial is pressed.
3. To return to the previous step, rotate the [⏮ AMS ⏭] dial to select the desired item, and press the [⏮ AMS ⏭] dial to enter.

### Test Mode Command List

The contents of test mode are as follows.

**Note:** Wrong operation in the test mode causes a trouble, thus requiring extreme care.

LINE command (1X): Use mainly for a manufacturing line.

| No. | Name | Description | Remarks |
|---|---|---|---|
| 05 | DSP MON1 | XUGF, XPCK, C2PO outputted from IC509 (CD DSP) | Not used for the servicing |
| 06 | DSP MON2 | MNT0, MNT1, MNT2, MNT3 outputted from IC509 (CD DSP) | Not used for the servicing |
| 07 | DSP MON3 | RFCK, XPCK, XROF, GTOP outputted from IC509 (CD DSP) | Electrical measurement, CD CLV jitter measurement |

STANDARD command (1X): Use when the servo is applied by manual operation.

| No. | Name | Description | Remarks |
|---|---|---|---|
| 12 | LD ON/OFF | The laser diode is turned on or off | On or off are switched alternately |
| 13 | SPIN ON/OFF | The spindle motor is rotated with the regulated voltage | On or off are switched alternately |
| 14 | FSRV ON/OFF | The focus servo is turned on or off | On or off are switched alternately |
| 15 | TSRV ON/OFF | The tracking servo is turned on or off | On or off are switched alternately |
| 16 | CLV ON/OFF | The spindle SLV servo is turned on or off<br>Focus and tracking servos must be already turned on | On or off are switched alternately |
| 17 | SSRV ON/OFF | The sled servo is turned on or off<br>Focus, tracking and spindle servos must be already turned on | On or off are switched alternately |
| 18 | ALL SRV ON | All servos are turned on | |
| 19 | ALL SRV OFF | All servos are turned off | Stop command in the test mode |

FOCUS command (2X): Focus related. (All servos must be already turned on (except command 21))

| No. | Name | Description | Remarks |
|---|---|---|---|
| 21 | FSRCH ON/OFF | The continuous vertical motion of the optical pick-up lens is turned on or off | Avoid a long-time use |
| 22 | F-BIAS UP | Increase focus bias | Focus bias value |
| 23 | F-BIAS DOWN | Decrease focus bias | Focus bias value |
| 24 | ADJ FCSBIAS | The focus bias is adjusted automatically<br>Both + and - directions are searched to search for best jitter point | |
| 25 | FGAIN UP/DW | The focus servo gain is switched between normal and down | Normal or down are switched alternately |
| 26 | FJMP UP/DWN | Focus jump is executed<br>UP: layer 0→1, DOWN: layer 1→0 | Valid only for DL |
| 27 | FOCUS AGC | The focus servo gain is adjusted automatically | |
| 28 | DISP FBdata | The focus bias adjusted value is displayed | Hexadecimal display 9 bit data |

**Note:** On or off and up or down are switched alternately

OFFSET (PI, FE, TE) command (3X): Adjusts the offset of PI, FE and TE signals.

| No. | Name | Description | Remarks |
|---|---|---|---|
| 31 | PI/FE OFSET | Adjusts the offset of PI, FE and TE signals<br>This adjustment must be executed after 61 DISC DETECT | TE offset adjustment is executed for the CD only |

TRACKING command (4X): Tracking servo related.

| No. | Name | Description | Remarks |
|---|---|---|---|
| 41 | TGAIN NM/UP | The tracking servo gain is switched between normal and up | Normal or up are switched alternately |
| 44 | ADJ TRK DSP | The traverse AGC and E-F balance adjustment is performed | |
| 45 | TRACKING AGC | The tracking servo gain is adjusted automatically | |

SEARCH command (5X): Track search related.(Not used for the servicing)

| No. | Name | Description | Remarks |
|---|---|---|---|
| 51 | 1-TRCK JUMP | One-track jump is performed | |
| 52 | M-TRCK MOVE | M-track movement is performed | |
| 53 | FINE SEARCH | Fine search is performed | |

DISC DETECT command (6X): Disc type check related.

| No. | Name | Description | Remarks |
|---|---|---|---|
| 61 | DISC DETECT | Disc type check is executed<br>Display after judgment<br>DSKMOD CD: Judged as CD<br>DSKMOD SL: Judged as SACD (SL)<br>DSKMOD DL: Judged as SACD (DL)<br>DSKMOD HLHD: Judged as HYBRID HD<br>DSKMOD CDRW: Judged as CD-RW | Refer to how to apply servo by manual operation (62 page) |
| 62 | SET DISC CD | Enter disc type CD setting | CD forced setting |
| 63 | SET DISC SL | Enter disc type SL setting | SL forced setting |
| 64 | SET DISC DD | Enter disc type DD setting | DD forced setting |
| 65 | SET DISC HH | Enter disc type HYBRID HD setting | HD forced setting |
| 66 | SET DISC HC | Enter disc type HYBRID CD setting | CD forced setting |

TOOLS command (8X): Performs aging, reads adjusting parameters, etc.

| No. | Name | Description | Remarks |
|---|---|---|---|
| 81 | VERSION | Firmware version is displayed | Example: Ver 1.00 |
| 83 | TRAY AGING | Tray open-close aging is performed<br>Not used for the servicing | Number of times and eccentricity measurement |
| 84 | JITTER | Jitter measurement | Not used for the servicing |
| 85 | ERROR RATE | Error rate measurement<br>CD: C1, C2<br>SACD: PO, PI1, PI2 | Error rate<br>Not used for the servicing |
| 86 | ALL SRV ON | Apply all servos<br>Full automatic measurement including PI, FE and TE offset adjustment is performed | Use when applying the servo by manual operation<br>Refer to STANDARD command (60 page) |
| 87 | DISP ADJ DT | Automatic adjusting parameters are displayed<br>The offset adjusted values are scroll-displayed in order of RF, VC, FE and TE | Refer to auto check items (65 page)<br><br>Refer to auto check items (65 page) |
| 88 | (DISP ADJ DT) | Automatic adjusting parameters are displayed<br>The set values of adjusting registers are scroll-displayed in order of PIOR, CCR and TRCR | Refer to auto check items (65 page) |
| 89 | (DISP ADJ DT) | Automatic adjusting parameters are displayed<br>The adjusted values are scroll-displayed in order of FGAIN, TGAIN, FBIAS and TRVSC | Refer to auto check items (65 page) |
| 8d | Set Up Init | Set to factory shipping mode<br>PLAY, REPEAT, DIGIFIL, etc. are initialized | Set when repair completed<br>Refer to 6-6. SHIPPING MODE (69 page) |
| 8F | 49 TRCK JIT | Used for jitter measurement of 49th music on SACD-S4 | For manufacturing line<br>Not used for the servicing |

QA command (9X)

| No. | Name | Description | Remarks |
|---|---|---|---|
| 92 | SET CHECK | The set is checked | Refer to 6-2 AUTO CHECK (65 page) |
| 94 | SET AGING | The set aging is performed<br>Repeat by the specified number of times or until an error occurred | Refer to 6-5 AGING MODE (69 page) |
| 95 | DISPLAY ERROR | The content of error recorded to the set is read and displayed<br>(Error recording) Only one item is recorded | |
| 96 | D-OUT OnOff | Digital out of CD is turned on or off | |
| 98 | APDO JITTER | | Not used for the servicing |
| 9C | BU DENCHO | The content of error recorded to the set is read, and then the S curve waveform, traverse waveform, and RF waveform can be checked successively | Refer to 6-7WAVEFORMS CHECK (71 page) |
| 9D | P-ON HOUR | Approximate cumulative power supplying time is displayed<br>(Initialized by 8d command) | In unit of 1 hour |
| 9E | RFD OUT | RFD output is turned on or off<br>SACD jitter measuring mode | Not used for the servicing |

### How to Apply Servo by Manual Operation

In analyzing failures of the set, the servo may be applied by manual operation. To apply servo in the test mode, use the following method.

1. After setting the test mode, rotate the [|◁◁ AMS ▷▷|] dial to select a command, and press the [|◁◁ AMS ▷▷|] dial to enter.
2. “61 DISC DETECT” (Disc type check)→“86 ALL SRV ON” (All servos on + auto adjustment)
3. If applying servo while checking the condition one by one, “61 DISC DETECT” (Disc type check)→“31 PI/FE OFSET” (Offset automatic adjustment)→“14 FSRV ON/OFF” (Focus servo on)→“16 CLV ON/OFF” (CLV servo on)→“44 ADJ TRK DSP ” (E-F balance adjustment)→“15 TSRV ON/OFF” (Tracking servo on)→“17 SSRV ON/OFF” (Sled servo on)→“24 ADJ FCSBIAS” (Focus bias adjustment)→“27 FOCUS AGC” (Focus auto gain adjustment)→“45 TRACKING AGC” (Tracking auto gain adjustment).

**Note:** 1. On and off are alternately switched in the same command.
2. For a stop, select “19 ALL SRV OFF” and press the [|◁◁ AMS ▷▷|] dial.

### Set Check

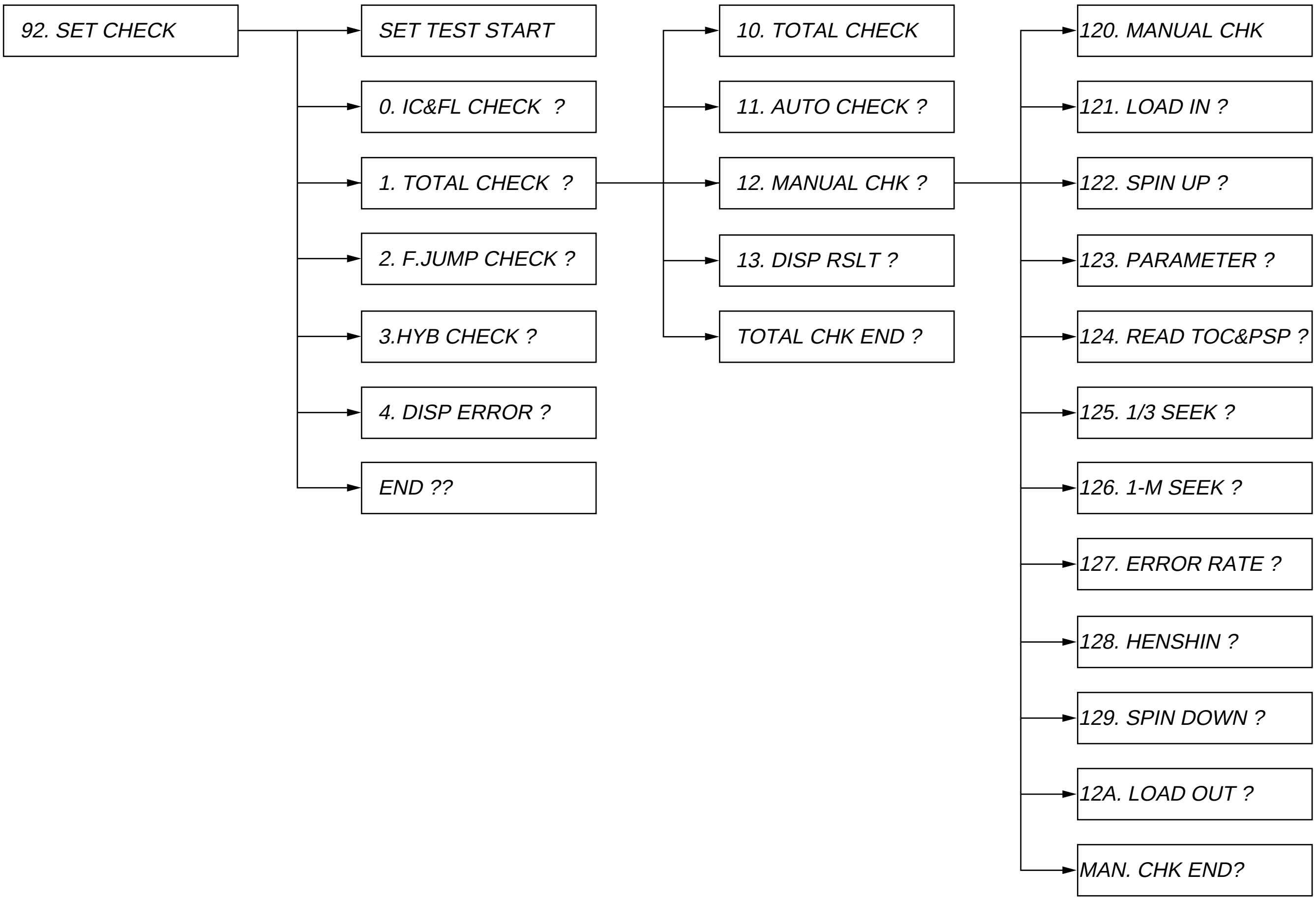


Press the [|◁◁AMS▷▷|] dial when No.□□□□□ □□□□□*1 is displayed, and a checking for that display will start or the lower layer will be selected. For the selection on the same layer, rotate the [|◁◁ AMS ▷▷|] dial. It is looped on the same layer, and when “END?” is displayed, press the [|◁◁ AMS ▷▷|] dial to return to the upper layer.

*1 □ denotes a displayed character.

**Manual Check Method**

In the “12. MANUAL CHK”, individual checks (121. LOAD IN to 12A. LOAD OUT) are possible.

**Example:** If 124. READ TOC of 12. MANUAL CHECK is to be checked.

**Setting Method:**

1. After setting the test mode, rotate the [⏮ AMS ⏭] dial to select “92. SET CHECK” and press the [⏮ AMS ⏭] dial to enter.
2. When “SET TEST START” is displayed, rotate the [⏮ AMS ⏭] dial clockwise by 2 clicks to select “1. TOTAL CHECK?” and press the [⏮ AMS ⏭] dial to enter.
3. When “10. TOTAL CHECK” is displayed, rotate the [⏮ AMS ⏭] dial clockwise by 2 clicks to select “12. MANUAL CHK?" and press the [⏮ AMS ⏭] dial to enter.
4. When “120. MANUAL CHK” is displayed, rotate the [⏮ AMS ⏭] dial clockwise by 4 clicks to select “124. READ TOC&PSP?” and press the [⏮ AMS ⏭] dial to enter.
5. A checking will start automatically.

**Note:** In making a check, the disc must be loaded. Immediately when a check started, the tray is drawn into the set. Also, the tray can be opened/closed even during the set check mode.

## 6-1. IC AND FLUORESCENT DISPLAY TUBE CHECK (SELF-DIAGNOSIS)

The communication between microcomputer and main ICs (self-diagnosis) and the fluorescent display tube all lit are checked.

**Checking Method:**

1. After setting the test mode, rotate the [⏮ AMS ⏭] dial to select "92. SET CHECK" and press the [⏮ AMS ⏭] dial to enter.
2. When "SET TEST START" is displayed, rotate the [⏮AMS⏭] dial clockwise by 1 click to select "0. IC&FL CHECK?" and press the [⏮ AMS ⏭] dial to enter.
3. A checking will start automatically, and "0. IC&FL CHECK" will be displayed. (Checking time is about 3 seconds)
4. After IC communication check, all segments of fluorescent display tube will be lit. At this time, check visually for a skipped character.
5. At successful completion of check, "0. IC CHECK OK" is displayed. In this case, no error exists in the IC interface. Proceed to 6-2. AUTO CHECK.

**Note:** The check mentioned above tests the communication from microcomputer to main ICs. Even if the check successfully finished, the IC to be checked is not always normal. Consider it for reference only.

6. In case of an IC communication error, the following display will be given during the checking. Possible causes of error are as listed below.

| Error display | Causes (typical example) |
|---|---|
| DVD DEC. ERROR | 1. IC701 (SACD decoder) is faulty<br>2. IC701 pin ⑯④ (XRST) does not go "H"<br>• IC901 pin ㊹ (XDIS) does not go "H"<br>• IC902 (expander) is faulty<br>3. 768fs (33.86688 MHz) is not present to IC701 pin ⑯⑦ (XTAL)<br>• IC811 (3-multiplying circuit) is faulty<br>• Clock signal 256fs is not sent from AUDIO board (CN901 pin ⑮)<br>• CN901 pin ⑯ (DFGND) and pin ⑭ (DF3V) are open or shorted<br>• CN901 pin ⑯ (DFGND) and pin ⑭ (DF3V) are open or shorted<br>• CN901 and FFC connection is loose, or FFC is disconnected |
| DVD DRAM ERR | 1. IC706 (D-RAM) is faulty<br>2. IC701 pin ⑯④ (XRST) does not go "H"<br>• IC901 pin ㊹ (XDIS) does not go "H"<br>• IC902 (expander) is faulty<br>3. Faulty communication line between IC701 and IC706<br>• Data line, address line, WE, etc.<br>4. D903 (1SS367) is faulty |
| CD DSP ERROR | 1. IC509 (CD DSP) is faulty<br>2. 768fs (33.86688 MHz) is not present to IC509 pin ㉛ (XTAL)<br>Same as cause 3 of DVD DEC. ERROR<br>3. IC509 pin ② (XRST) does not go "H"<br>• IC901 pin ㊹ (XDIS) does not go "H"<br>• IC902 (expander) is faulty |
| D/A ERROR | 1. IC904 (D/A converter) is faulty<br>2. Faulty IC703 (jitter amplifier) peripheral circuits<br>3. IC901 pin ㊽ (JIT) is faulty |
| EEPROM ERROR | 1. IC903 (EEPROM) is faulty |

| Error display | Causes (typical example) |
|---|---|
| PRAWN DRAM ERR *1 | 1. IC808 (D-RAM) is faulty<br>2. IC801 (DSD decoder) is faulty<br>3. 768fs (33.86688 MHz) is not present to IC801 pin ⑭ (MCKI)<br>Same as cause 3 of DVD DEC. ERROR<br>4. IC801 pin ⑬ (XRST) does not go "H"<br>• IC901 pin ㊹ (XDIS) does not go "H"<br>• IC902 (expander) is faulty<br>5. Faulty communication line between IC801 and IC808<br>• Data line, address line, WE, etc.<br>6. D903 (1SS367) is faulty<br>D+3.3V is not present to IC808 |
| RF AMP ERROR | 1. IC001 (RF AMP) is faulty<br>2. Loose connection between CN503 on MAIN board and CN001 on RF board, or FFC disconnection<br>CN503 pin ⑲ (CLK RF), pin ⑳ (DATA RF) and pin ㉑ (SDEN) must be checked |

*1 DSD decoder is also checked.

**Causes Common to Each IC:**

1. Faulty communication line between microcomputer and each IC.
   Disconnected patterns, floating series resistors, bridge, etc.
2. Faulty IC supply voltage.
   Particularly, check D+3.3V voltage. (D+5V for display microcomputer)
3. Faulty microcomputer communication port to each IC

**Note:** In case of more than two errors, the error display is switched over one after another, thus making the reading difficult.
In such a case, press again the [⏮ AMS ⏭] dial to make a recheck for error reading.

### 6-2. AUTO CHECK (AUTOMATIC VARIOUS MEASUREMENTS)

The auto check is performed to check if the set operates stably. Though a checking is made automatically, whether the measured data are within the specification is evaluated by the service person. The auto check results in NG immediately, if the check itself causes an error.

**Setting Method of Auto Check Mode:**

1. After setting the test mode, rotate the [I◁◁ AMS ▷▷I] dial to select “92. SET CHECK” and press the [I◁◁ AMS ▷▷I] dial to enter.
2. When “SET TEST START” is displayed, rotate the [I◁◁ AMS ▷▷I] dial clockwise by 2 clicks to select “1. TOTAL CHECK?” and press the [I◁◁ AMS ▷▷I] dial to enter.
3. When “10. TOTAL CHECK” is displayed, rotate the [I◁◁ AMS ▷▷I] dial clockwise by 1 click to select “11. AUTO CHECK” and press the [I◁◁ AMS ▷▷I] dial to enter.

### CD and SACD (SL) Disc Operation Check

**Checking method:**

1. Press the [OPEN/CLOSE] button to open the tray and place the test disc *1.
2. Press the [I◁◁ AMS ▷▷I] dial, and the following check will be performed automatically.
3. Finally, the test disc will be ejected and the auto check will finish.
4. “AUTO CHECK OK” will be displayed at successful completion of auto check.
5. Recheck is enabled if the [I◁◁ AMS ▷▷I] dial is pressed in step 4. (Also, use this operation when exchanging the test disc)
6. In case of an error during the checking, the check is interrupted automatically and the error is displayed. (Error display example: “LOAD IN ERROR”) After error display, “CONT?STOP (J/S)” is displayed. In this case, if the [I◁◁ AMS ▷▷I] dial is pressed, the check where the error occurred is skipped and you can proceed to the next check. Also, if [■] button is pressed, the check finishes and “AUTO CHECK NG” is displayed when even one NG item exists.

*1 Use PATD-012 or YEDS-18 for CD, and SATD-S4 for SACD (SL). Using another disc will result in a checking failure.

**Check Items:**

| Items | Description | Remarks |
|---|---|---|
| LOAD IN TIME (msec) | Time until a disc is chucked from the state where loading tray is out | Loading in switch H→L |
| SPIN UP TIME (msec) | Time from spindle kick to PLL lock | Lock signal L→H |
| RF/VC/FE/TE (ORG) | Offset values before RF (PI), VC, FE, TE signal offset adjustment<br>RF (8 bit data in hex notation)<br>VC, FE, TE (9 bit data in hex notation) | At offset 0<br>RF: A0h<br>VC, FE, TE: 00h |
| RF/VC/FE/TE (ADJ) | Offset values after RF (PI), VC, FE, TE signal offset adjustment<br>(Less than ORG value if offset correction is normal)<br>RF (8 bit data in hex notation)<br>VC, FE, TE (9 bit data in hex notation) | VC offset is not adjusted<br>(Measurement only)<br>Also, for SACD, the TE offset is not measured and adjusted |
| PI/TRVS PP (ORG/ADJ) | PI (ORG): PI value at disc type check (decimal data)<br>PI (ADJ): PI value after PI offset adjustment<br>(read value at microcomputer A/D) (decimal data)<br>TRVS PP (ORG): Traverse level before level correction (AGC)<br>(decimal data)<br>TRVS PP (ADJ): Traverse level after level correction (AGC)<br>(decimal data) | PI level conversion<br>Read value × 12.9mV<br><br>Traverse level conversion<br>Read value × 12.9mV<br><br>12.9mV=3.3V ÷ 256 (8 bit) |
| PIOR/CCR/TRCR | PIOR: Set value of PI offset coarse adjusting register<br>CCR: Set value of FE offset coarse adjusting register<br>TRCR: Set value of TE offset coarse adjusting register | Registers in RF amplifier |
| FOCUS/TRK GAIN | Auto gain adjusted values of focus and tracking servos<br>(8 bit data in hex notation) | Reference: 30h |
| FBIAS/TRVSC/TRCR2/CFR | FBIAS: Focus bias set value (9 bit data in hex notation)<br>TRVSC: Traverse center value (9 bit data in hex notation)<br>TRCR2: Set value of E-F balance coarse adjusting register<br>CFR: Set value of traverse level adjusting register | TRCR2 adjusts the E-F gain balance and used for CD only<br>(Fixed to 06 for SACD)<br>TRCR2 and CFR are registers in RF amplifier |
| MIN JITTER AT F.BIAS | Minimum jitter value in focus bias adjustment (CD only) | Correlative with RF jitter |
| READ TOC TIME (msec) | Time required for TOC reading | |
| PSP AMPLITUDE | | SACD only |
| 1/3 SEEK TIME<br>F) AVE/MIN/MAX (msec):<br>R) AVE/MIN/MAX (msec): | Seek time between 1/3LBA and 2/3LBA of the disc<br>1/3LBA→2/3LBA average/minimum/maximum<br>2/3LBA→1/3LBA average/minimum/maximum | LBA: Absolute address |
| 1/MAX SEEK TIME<br><br>F) AVE/MIN/MAX (msec):<br>R) AVE/MIN/MAX (msec): | Seek time between most inward track (0LBA) and most outward track max LBA<br>most inward→most outward average/minimum/maximum<br>most outwar→most inward average/minimum/maximum | |
| ERROR RATE | Error rate measurement<br>For CD: Average value/Maximum value of C1 and C2<br>For SACD: Average value/Maximum value of PO, PI1 and PI2 | Measure for 10 sec at track No.5<br>For the SACD, 160 block data except the data under tracking jump |

| Items | Description | Remarks |
|---|---|---|
| HENSIN | Eccentricity measurement<br>Eccentricity (actual eccentric amount) of disc, disc pulley total | For the CD only are measured<br>• Read by dividing by 10<br>• 0 may be displayed if eccentricity is small (10um or less) (Due to measurement reason) |
| SPIN DOWN TIME (msec) | Time from spindle brake application to rotation stop | For CD: Over 64 monitoring<br>For SACD: VCO1D monitoring |
| LOAD OUT TIME (msec) | Time until loading table comes out from the state where a disc is in chuck | Loading out switch H→L |

**Measured Data Reading Method:**

To judge the check result, the measured data must be read.

1. When “AUTO CHECK OK” is displayed, rotate the ⧏◁◁ AMS ▷▷⧐ dial clockwise by 2 clicks.
2. When “13. DISP RSLT?” is displayed, press the ⧏◁◁ AMS ▷▷⧐ dial to enter.
3. “PLEASE WAIT” will be displayed and in several seconds, “13. DISP RESULT” will be displayed.
4. Rotate the ⧏◁◁ AMS ▷▷⧐ dial clockwise by 1 click, and the “LOAD IN” will be displayed.
5. Press the ⧏◁◁ AMS ▷▷⧐ dial to enter. The LOAD IN TIME measured value will be displayed.
6. Compare the displayed value with the following specified value.
7. Hence, repeat step 4 to 6 (display is variable) and read the measured data respectively.
8. Compare the measured data with the specified value to check for NG item.

**Note:** Blank display of measured value means that an error occurred during the checking or no measurement was taken place.

**Specified Value:**

(1) SACD (Use the test disc SATD-S4)

**Note:** Measured values in check items are typical ones.

| Check items | | Specified value |
|---|---|---|
| LOAD IN TIME (msec) | : 2126 | 3000 msec or less |
| SPIN UP TIME (msec) | : 1652 | 2000 msec or less |
| RF/VC/FE/TE AVRG (ORG) | : 98, C, 1DE, 0 | RF: 80-9B, VC: 1F1-10, FE: 1d8-42, TE: 1BB-5C |
| RF/VC/FE/TE AVRG (ADJ) | : 9F, C, 4, 0 | RF: 98-A5, VC : 1F1-10, FE: 1F1-10, TE: 1F1-10 |
| PI/TRVS PP (ORG/ADJ) | : 81, 131, 78, 105 | PI ORG: 70-8A, PI ADJ: 122-135 |
| PIOR/CCR/TRCR | : 1A, 31, 1F | No specified value given |
| FOCUS/TRK GAIN | : 2E, 24 | FOCUS: 1C-45, TRK: 1C-45 |
| FBIAS/TRVSC/TRCR2/CFR | : 2,13, 6, 60 | F.BIAS: 1D0-4F, TRVSC: 1D0-35 TRCR2, CFR: no specified value given |
| READ TOC TIME (msec) | : 1283 | 2500 msec or less |
| PSP AMPLITUDE | : 1666 | 1200 msec or above |
| 1/3 SEEK TIME<br>F) AVE/MIN/MAX (msec)<br>R) AVE/MIN/MAX (msec) | <br>: 967, 928, 990<br>: 974, 933, 993 | <br>AVE: 1200 msec or less, MAX: 1500 msec or less<br>AVE: 1200 msec or less, MAX: 1500 msec or less |
| 1/MAX SEEK TIME<br>F) AVE/MIN/MAX (msec)<br>R) AVE/MIN/MAX (msec) | <br>: 1958, 1938, 1968<br>: 1915, 1909, 1935 | <br>AVE: 2500 msec or less, MAX: 3000 msec or less<br>AVE: 2500 msec or less, MAX: 3000 msec or less |
| ERROR RATE<br>PO MAX/AVE FRAME<br>PO MAX/AVE NUM<br>PI1 MAX/AVE FRAME<br>PI1 MAX/AVE NUM<br>PI2 MAX/AVE FRAME<br>PI2 MAX/AVE NUM | <br>: 0, 0<br>: 160, 3<br>: 0, 0<br>: 242, 17<br>: 0, 0<br>: 128, 2 | <br>No specified value given<br>MAX: 1000 msec or less, AVE: 200 msec or less<br>No specified value given<br>MAX: 1000 msec or less, AVE: 200 msec or less<br>No specified value given<br>MAX: 1000 msec or less, AVE: 200 msec or less |
| SPIN DOWN TIME (msec) | : 1342 | 2000 msec or less |
| LOAD OUT TIME (msec) | : 1983 | 3000 msec or less |

(2) CD (Use the test disc PATD-012 or YEDS-18)

**Note:** Measured values in check items are typical ones.

| Check items | | Specified value |
|---|---|---|
| LOAD IN TIME (msec) | : 2141 | 3000 msec or less |
| SPIN UP TIME (msec) | : 1372 | 1700 msec or less |
| RF/VC/FE/TE AVRG (ORG) | : 98, C, 1D6, 4 | RF: 80-9B, VC: 1F1-10, FE: 1d8-42, TE: 1BB-5C |
| RF/VC/FE/TE AVRG (ADJ) | : 9F, A, 1FF, 4 | RF: 98-A5, VC: 1F1-10, FE: 1F1-10, TE: 1F1-10 |
| PI/TRVS PP(ORG/ADJ) | : 81, 131, 95, 92 | PI ORG: 70-8A, PI ADJ: 122-135 |
| PIOR/CCR/TRCR | : 1A, 11, 1F | No specified value given |
| FOCUS/TRK GAIN | : 2E, 2D | FOCUS: 1C-45, TRK: 1C-45 |
| FBIAS/TRVSC/TRCR2/CFR | : 0, 10, 5, A0 | F.BIAS: 1E0-30, TRVSC: 1F0-10 TRCR2, CFR: no specified value given |
| MIN JITTER AT F.BIAS | : 94 | 180 or less |
| READ TOC TIME (msec) | : 1410 | 2500 msec or less |
| 1/3 SEEK TIME<br>F) AVE/MIN/MAX (msec)<br>R) AVE/MIN/MAX (msec) | <br>: 824, 804, 850<br>: 850, 833, 860 | <br>AVE: 1100 msec or less, MAX: 1400 msec or less<br>AVE: 1100 msec or less, MAX: 1400 msec or less |
| 1/MAX SEEK TIME<br>F) AVE/MIN/MAX (msec)<br>R) AVE/MIN/MAX (msec) | <br>: 2086, 1999, 2151<br>: 1805, 1793, 1835 | <br>AVE: 2400 msec or less, MAX: 2800 msec or less<br>AVE: 2400 msec or less, MAX: 2800 msec or less |
| ERROR RATE<br>C1 MAX/AVE<br>C2 MAX/AVE | <br>: 3, 0<br>: 0, 0 | <br>C1 MAX: 30 or less<br>C2 MAX: 0 |
| HENSHIN RYOU (1/10um) | : 89 | 1000 or less (100 um or less) |
| SPIN DOWN TIME (msec) | : 1272 | 1700 msec or less |
| LOAD OUT TIME (msec) | : 2013 | 3000 msec or less |

**Note:** RF, VC, FE, TE, FBIAS and TRVSC measured values are hexadecimal data with positive and negative signs. When comparing the measured value with the specified value, refer to the following.

| *Hexadecimal (hex) display 9 bit data* | | | *Hexadecimal (hex) display 8 bit data* | |
|---|---|---|---|---|
| | | *MAX* | | |
| *FF* | *011111111 (+255)* | | *7F* | *01111111 (+127)* |
| *FE* | *011111110 (+254)* | | *7E* | *01111110 (+126)* |
| ⋮ | | *(+) Side* | ⋮ | |
| | | | *02* | *00000010 (+2)* |
| *01* | *000000001 (+1)* | | *01* | *00000001 (+1)* |
| *00* | *000000000 (0)* | *0* | *00* | *00000000 (0)* |
| *1FF* | *111111111 (-1)* | | *FF* | *11111111 (-1)* |
| | | | *FE* | *11111110 (-2)* |
| ⋮ | | *(-) Side* | ⋮ | |
| *101* | *100000001 (-255)* | | *81* | *10000001 (-127)* |
| *100* | *100000000 (-256)* | *MIN* | *80* | *10000000 (-128)* |

## 6-3. SACD (DL) DISC OPERATION CHECK

(• Perform as necessary)

The stability of the set can be checked by repeating the combined operation of focus jump (layer 0→1, layer 1→0) and access to the most inward track←→most outward track by the set number of times or until an error occurs using the dual layer HD disc, DL disc.

A set of operation including an access to the layer 0 (most inward track)→layer 0 (most outward track)→focus jump (layer 0→1)→layer 1 (most outward track)→layer 1 (most inward track)→focus jump (layer 1→0) is carried out repeatedly by the set number of times.

**Checking Method:**

1. After setting the test mode, rotate the [⏮◁ AMS ▷⏭] dial to select "92. SET CHECK" and press the [⏮◁ AMS ▷⏭] dial to enter.
2. When "SET TEST START" is displayed, rotate the [⏮◁ AMS ▷⏭] dial clockwise by 3 clicks to display "2. F.JMP CHECK?".
3. Press the [OPEN/CLOSE] button to open the tray, and place the DL disc.
4. Press the [⏮◁ AMS ▷⏭] dial to load the tray into the set.
5. "NOW SET UP" will be displayed and the DL disc setup will start. (It takes about ten and several seconds to set up the disc as two layers of layer 0 and layer 1 are adjusted)
6. At the completion of setup, "F.JUMP TIMES" will be displayed.
7. Rotate the [⏮◁AMS▷⏭] dial clockwise by 5 clicks to display "5". (If 5 sets of operation is executed *1)
8. Press the [⏮◁ AMS ▷⏭] dial, and the check will start.
9. Immediately when the check finished, "UP MAX □□□□"→"UP AVE □□□□"→"DW MAX □□□□"→"DW AVE □□□□"→"F.JMP OK [TIMES]" will be displayed repeatedly. (□ denotes the measured value in msec)

   UP MAX: Max time required for layer 0 (most inward track)→layer 0 (most outward track)→focus jump (layer 0→1)

   UP AVE: Average time required for layer 0 (most inward track)→layer 0 (most outward track)→focus jump (layer 0→1)

   DW MAX: Max time required for layer 1 (most outward track)→layer 1 (most inward track)→focus jump (layer 1→0)

   DW AVE: Average time required for layer 1 (most outward track)→layer 1 (most inward track)→focus jump (layer 1→0)

   Specified value: 7000 msec or less (if no error occurred)

   If an error occurred due to defocusing during the checking, refer to the following error list. (69 page)
10. Press the [OPEN/CLOSE] button, and the disc will be ejected and the check will finish. Also, if the [⏮◁ AMS ▷⏭] dial is pressed in step 9, "2. F.JUMP CHK OK" will be displayed. Then, if the [⏮◁ AMS ▷⏭] dial is again pressed, "2. F.JMP CHECK" will be displayed instantaneously and a recheck is enabled from the step 5 in the same manner.

*1 Setting arbitrary number of times instead of 5 allows the checking to be repeated by the set number of times. Also, setting 0 (zero) allows the aging check to be repeated until an error occurs.

## 6-4. HYBRID DISC OPERATION CHECK

(• Perform as necessary)

This test checks the auto adjustment time required when the disc is switched between HD (SACD) layer and CD layer. This test is conducted to check the stability in switching from CD to SACD, or SACD to CD in the HYBRID disc.

A set of operation including CD layer stop state→HD layer auto adjustment→HD layer TOC reading→HD layer stop state→CD layer auto adjustment→CD layer TOC reading→CD layer stop state is repeated by the set number of times.

**Checking Method:**

1. After setting the test mode, rotate the [⏮◁ AMS ▷⏭] dial to select "92. SET CHECK" and press the [⏮◁ AMS ▷⏭] dial to enter.
2. When "SET TEST START" is displayed, rotate the [⏮◁ AMS ▷⏭] dial clockwise by 4 clicks to display "3. HYB CHECK?".
3. Press the [OPEN/CLOSE] button to open the tray, and place the HYBRID disc.
4. Press the [⏮◁ AMS ▷⏭] dial to load the tray into the set.
5. "NOW SET UP" will be displayed and the HYBRID disc setup will start. (It takes about several seconds to set up the disc *1)
6. At the completion of setup, "CHANGE TIMES?" will be displayed.
7. Rotate the [⏮◁AMS▷⏭] dial clockwise by 5 clicks to display "5" (if 5 sets of operation is executed *2)
8. Press the [⏮◁AMS▷⏭] dial, and "START" will be displayed and the check will start. During the check, the following will be displayed.

   "CD—>HD" display: Time from switching from CD layer to HD layer up to start of play is measured.

   "HD—>CD" display: Time from switching from HD layer to CD layer up to start of play is measured.
9. Immediately when the check finished, "CD MAX □□□□"→"CD AVE □□□□"→"HD MAX □□□□"→"HD AVE □□□□" will be displayed repeatedly. (□ denotes the measured value in msec)

   Specified value: 10000 msec or less (if no error occurred)

   If an error occurred due to defocusing during the checking, refer to the following error list. (69 page)
10. Press the [OPEN/CLOSE] button, and the disc will be ejected and the check will finish. Also, if the [⏮◁ AMS ▷⏭] dial is pressed in step 9, "HYB CHK OK" will be displayed. Then, if the [⏮◁AMS▷⏭] dial is again pressed, "HYBRID CHECK" will be displayed instantaneously and a recheck is enabled from the step 5 in the same manner.

*1 "NOW SET UP" display may continue for several minutes and an error may be displayed depending on the discs. In this case, press the [⏮◁ AMS ▷⏭] dial again.

*2 Setting arbitrary number of times instead of 5 allows the checking to be repeated by the set number of times. Also, setting 0 (zero) allows the aging check to be repeated until an error occurs

### 6-5. AGING MODE

(• Perform as necessary)
The aging can be performed to the set in the test mode. The aging can be continued by the set number of times or until an error occurs.
In the aging, the following operations are repeated.
Load in→Disc detect→Servo on→Auto adjustment→TOC reading→Play of first track for 5 second→Play of last track for 5 second→Play of first track for 5 second→Load out

**Setting Method:**

1. After setting the test mode, rotate the [⏮ AMS ⏭] dial to select "94. SET AGING" and press the [⏮ AMS ⏭] dial to enter.
2. When "AGING TIMES" is displayed, rotate the [⏮AMS⏭] dial to set the number of aging times. (For the number of times, every 10 times can be set. Setting 0 (zero) eliminates the count limitation where the aging is repeated until an error occurs)
   **Note:** Do not perform unmanned overnight aging..
3. Press the [⏮ AMS ⏭] dial, and "AGING START" will be displayed instantaneously, then "DISC IN & JOG ON" will be displayed and the tray will come out automatically.
4. Place a disc (CD or SACD SL disc) on the tray, and press the [⏮ AMS ⏭] dial to start the aging.
5. At the completion of aging by the set number of times, the tray will come out automatically and the check will stop.
   Typical time required for aging    About 1 hour/100 times
   "AGING SUCCESS!" will be displayed if no error occurred in the aging, or the error will be displayed if an error occurred. (Refer to the following error list)

### 6-6. SHIPPING MODE

The repaired set must be initialized, and for this purpose the set should be set to the shipping mode.

**Setting Method:**

1. After setting the test mode, rotate the [⏮ AMS ⏭] dial to select "8d Set Up Init" and press the [⏮ AMS ⏭] dial to enter.
2. "8D 000000000 00" will be displayed, and if the scroll starts in the left direction, the set initialization has completed
3. Press the [POWER] button to turn the power off.

**Note:** Take care not to leave the test disc in the set.

### Error List

An error occurring during the check in the aging mode of the test mode is displayed automatically (scroll display) immediately when the error occurred.

Error display is as follows.
Error name, Disc type, IN SW (Sled in switch state), FOK (FOK signal state), LOCK (LOCK signal state), From (Displayed if effective), To (Displayed if effective), Aging times (Displayed in aging mode only)
Display example
ACCESS MOVE ERROR : SACDSL : IN SW 1 FOK 0 LOCK 0 : FROM 205663 : TO 2461601 : TIMES 5
(Error name) (Disc type) (Sled in switch, FOK, LOCK signal state) (Relative address) (Relative address)(Aging times)

**Display Items List:**

| Display items | Description | Remarks |
|---|---|---|
| Error name | →Refer to the error display list | |
| IN SW | Sled in switch state when an error occurred<br>0: switch off    Not limit in<br>1: switch on    Limit in (Optical pick-up is at most inward track) | |
| FOK | FOK signal state when an error occurred<br>FOK signal    Is focus on?<br>0: FOK L (Focus off), 1: FOK H (Focus on) | |
| LOCK | LOCK signal state when an error occurred.<br>LOCK signal    Is PLL lock?<br>0: LOCK L    Not lock, 1: LOCK H    Lock | |
| From | Displayed if effective in the error item<br>→Refer to the error display list | Disc PSN (relative address) is displayed in case of access error |
| To | Displayed if effective in the error item<br>→Refer to the error display list | Disc PSN (relative address) is displayed in case of access error |

**Error Display List:**

| Error display | Error description | Main causes of errors |
|---|---|---|
| LOAD IN ERROR | Tray loading in time out | CDM mechanism, loading in switch or loading driver IC is faulty |
| LOAD OUT ERROR | Tray loading out time out | CDM mechanism, loading out switch or loading driver IC is faulty |
| DISC DETECT ERROR | Disc type error<br>MIRR measured time is displayed in From: | Optical pick-up, RF amplifier or CD DSP IC is faulty |
| OFFSET ADJUST ERROR | Offset adjustment error | Optical pick-up, RF amplifier or CD DSP IC is faulty |
| FCS SRV ON ERROR | Focus servo error<br>An error code is displayed in From: | From:1 means focus search failed<br>From:2 means defocusing |
| CLV SRV ON ERROR | CLV servo error | Defocusing |
| E-F BALANCE ERROR | E-F balance adjustment error | Defocusing |
| TRK SRV ON ERROR | Tracking servo error | Tracking servo on time out<br>Optical pick-up, RF amplifier or CD DSP IC is faulty |
| SLD SRV ON ERROR | Sled servo error | Sled servo on time out |
| FOCUS BIAS ERROR | Focus bias adjustment failed<br>An error code is displayed in From: | Defocusing during adjustment<br>Description of display<br>An error code is displayed in From<br>From:1 means retry failed 3 times<br>From:2 means abnormal value<br>Optical pick-up, RF amplifier or CD DSP IC is faulty |
| FCS AGC ERROR | Error at focus gain automatic adjustment | Defocusing during adjustment<br>Optical pick-up, RF amplifier or CD DSP IC is faulty |
| TRK AGC ERROR | Error at tracking gain automatic adjustment | Defocusing during adjustment<br>Optical pick-up, RF amplifier or CD DSP IC is faulty |
| ACCESS 1TJ ERROR | Access Error at one-track jump<br>Effective addresses (PSN) are displayed in From: and To: | Access failed<br>Defocusing at access, etc |
| ACCESS FINE ERROR | Access Error at fine search<br>Effective addresses (PSN) are displayed in From: and To: | Access failed<br>Defocusing at access, etc |
| ACCESS MOVE ERROR | Access Error at M-track MOVE<br>Effective addresses (PSN) are displayed in From: and To: | Access failed<br>Defocusing at access, etc |
| WHILE PLAYING ERROR | Error during disc playing | Defocusing<br>Focusing retry failed |
| FCS JUMP ERROR | Time out error at focus jump | Defocusing<br>Focusing retry failed |

System errors are as follows.
**Note:** This error is not saved in the set.

| Display | Description |
|---|---|
| Toc Error * | Error during the time from auto adjustment to TOC reading, Different type of disc (Such as a DVD disc), Disc is dirty |
| Toc Error **** | Illegal SACD (Such as a pirated version) |
| Read Error | Music data read error (Error during disc playing) |

## 6-7. WAVEFORMS CHECK

This set performs automatic adjustment for each disc, and therefore the set need not be adjusted when parts are replaced, but it requires checking following the description in this section, 6-1. IC AND FLUORESCENT DISPLAY TUBE CHECK and 6-2. AUTO CHECK.
For the check, the test mode is used. Wrong setting causes a trouble, thus requiring extreme care.

### BU Electrical Adjustment Mode

The BU electrical adjustment mode is used to check the S curve waveform, traverse waveform and RF waveform. After a disc is placed on the tray, each time the |◁◁ AMS ▷▷| dial is pressed, the check mode is switched in order for S curve waveform→traverse waveform→RF waveform.

**Setting Method:**
After setting the test mode, rotate the |◁◁AMS▷▷| dial to select “9C BU DENCHO” and press the |◁◁ AMS ▷▷| dial to enter. “BU MEASURE” will be displayed if the BU electrical adjustment mode becomes active.

### S Curve Check

**Connection:**

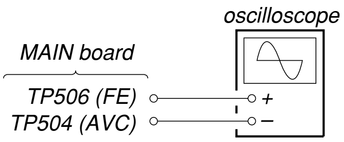


**Checking Method:**
1. After setting the BU electrical adjustment, place the test disc (PATD-012 or SATD-S4) on the tray and close the tray, then press the |◁◁ AMS ▷▷| dial.
2. At the completion of disc type check, “CD DETECT” will be displayed (for PATD-012 or YEDS-18).
   **Note:** For the SATD-S4, “SACD DETECT“ is displayed.
3. Press again the |◁◁AMS▷▷| dial, and the S curve waveform check mode will become active and “S-J1 MODE” will be displayed.
4. Connect an oscilloscope to the TP506 (FE) and TP504 (AVC) on the MAIN board.
5. Check that the level Ⓐ and Ⓑ of waveform on the oscilloscope satisfy the specification.

**Specified Value:**

| Disc | Ⓐ | Ⓑ |
|---|---|---|
| SATD-04 | 0.7 to 1.7 Vp-p | - 0.1 to +0.1V |
| PATD-012 or YEDS-18 | | |

*S curve waveform*

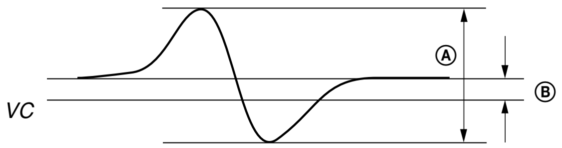


**Note:** For easier observation of this waveform, extend the sweep time and raise the brightness.

**Checking and Connecting Location : See page 73.**

### Traverse Check

**Connection:**

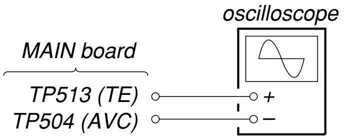


**Checking Method:**
1. Under the condition of S curve waveform check mode in step 5, press the |◁◁ AMS ▷▷| dial.
2. After “WAIT” is displayed, the traverse waveform check mode will become active and “TRAVERSE MODE” will be displayed.
3. Connect an oscilloscope to the TP513 (TE) and TP504 (AVC) on the MAIN board.
4. Check that the level Ⓐ and Ⓑ of waveform on the oscilloscope satisfy the specification.

**Specified Value:**

| Disc | Ⓐ | Ⓑ |
|---|---|---|
| SATD-04 | 0.9 to 1.5 Vp-p | - 0.1 to +0.1V |
| PATD-012 or YEDS-18 | | |

*Traverse waveform*

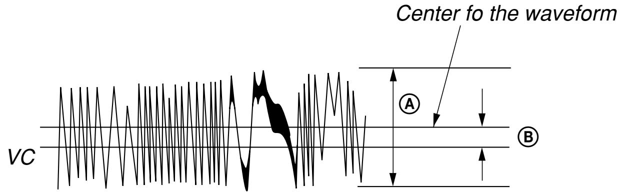


**Checking and Connecting Location : See page 73.**

## RF Level Check

**Connection:**

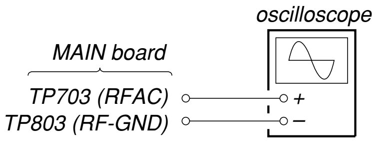


**Checking Method:**

1. Under the condition of traverse waveform check mode in step 4, press the [|◁◁ AMS ▷▷|] dial.
2. Connect an oscilloscope to the TP703 (RFAC) and TP803 (RF-GND) on the MAIN board.
3. After "WAIT" is displayed, the RF waveform check mode will become active and "PLAY 5th" will be displayed, and the 5th music on the disc will be played.
4. Check that the RF waveform is clear and the level satisfies the specification.
5. Press the [|◁◁AMS▷▷|] dial, and "GAISHU" will be displayed and the outward track of the disc will be played.
6. Check that the RF waveform is clear and the level satisfies the specification.
7. Press the [|◁◁AMS▷▷|] dial, and "NAISHU" will be displayed and the inward track of the disc will be played.
8. Check that the RF waveform is clear and the level satisfies the specification.
9. After checking, press the [|◁◁ AMS ▷▷|] dial, and the test is over when "BU MEASURE" is displayed.
10. Press the [OPEN/CLOSE] button to open the tray, and remove the test disc.
11. Using each type of disc, repeat from step 1 of S curve waveform check up to step 10 of RF level check.
12. When the check is over, press the [POWER] button to turn the power off.

**Note:** Take care not to leave the test disc in the set.

**Specified Value:**

| Disc | Ⓐ |
|---|---|
| SATD-S4 | 0.9 to 1.5 Vp-p |
| PATD-012 or YEDS-18 | |

*RF signal waveform*

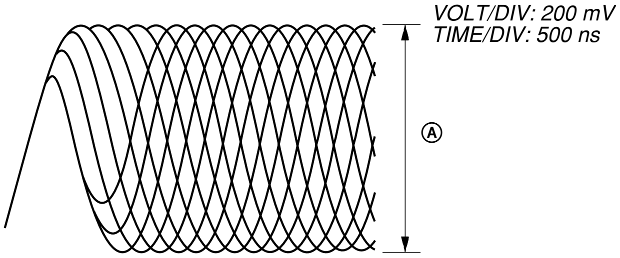


**Note:** Clear RF waveform refers to the waveform where ◊ shapes should be distinctively observed in the center.

**Checking and Connecting Location : See page 73.**

## CLV Jitter Check

**Connection:**

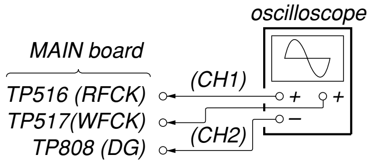


**Checking Method:**

1. Set the test mode.
2. Connect an oscilloscope to the TP516 (RFCK) (CH1), TP517 (WFCK) (CH2) and TP808 (DG) (GND) on the MAIN board.
3. Place the test disc PATD-012 or YEDS-18 on the tray, and close the tray.
4. Rotate the [|◁◁AMS▷▷|] dial to select "61 DISC DETECT", and press the [|◁◁AMS▷▷|] dial to enter. Then, the disc type will be judged.
5. Check that the disc type has been judged. (For the PATD-012, "DSKMOD CD" will be displayed. Refer to the test mode, DISC DETECT command (page 61))
6. Rotate the [|◁◁ AMS ▷▷|] dial to select "86 ALL SRV ON", and press the [|◁◁ AMS ▷▷|] dial. Then, the disc will rotate, automatic adjustment will be carried out, and all servos will be turned on.
7. Rotate the [|◁◁AMS▷▷|] dial to select "07 DSP MON3", and press the [|◁◁ AMS ▷▷|] dial to enter.
8. Check that the value Ⓐ of waveform on the oscilloscope satisfies the specification.
9. Rotate the [|◁◁AMS▷▷|] dial to select "19 ALL SRV OFF", and press the [|◁◁ AMS ▷▷|] dial. Then, all servos will be turned off and the disc rotation will stop.
10. Press the [OPEN/CLOSE] button to open the tray, and remove the test disc.
11. Press the [POWER] button to turn the power off.

**Note:** Take care not to leave the test disc in the set.

**Specified Value:**

| Disc | Ⓐ |
|---|---|
| PATD-012 or YEDS-18 | 50 µsec or less |

*CLV jitter waveform*

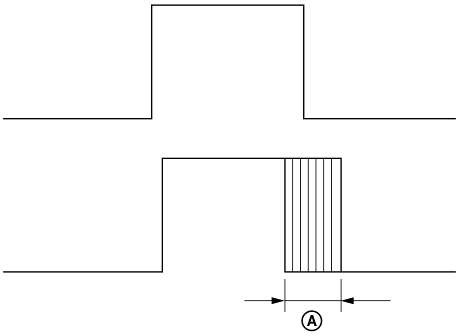


**Checking and Connecting Location : See page 73.**

**Checking and Connecting Location:**

**– MAIN Board (Component Side) –**

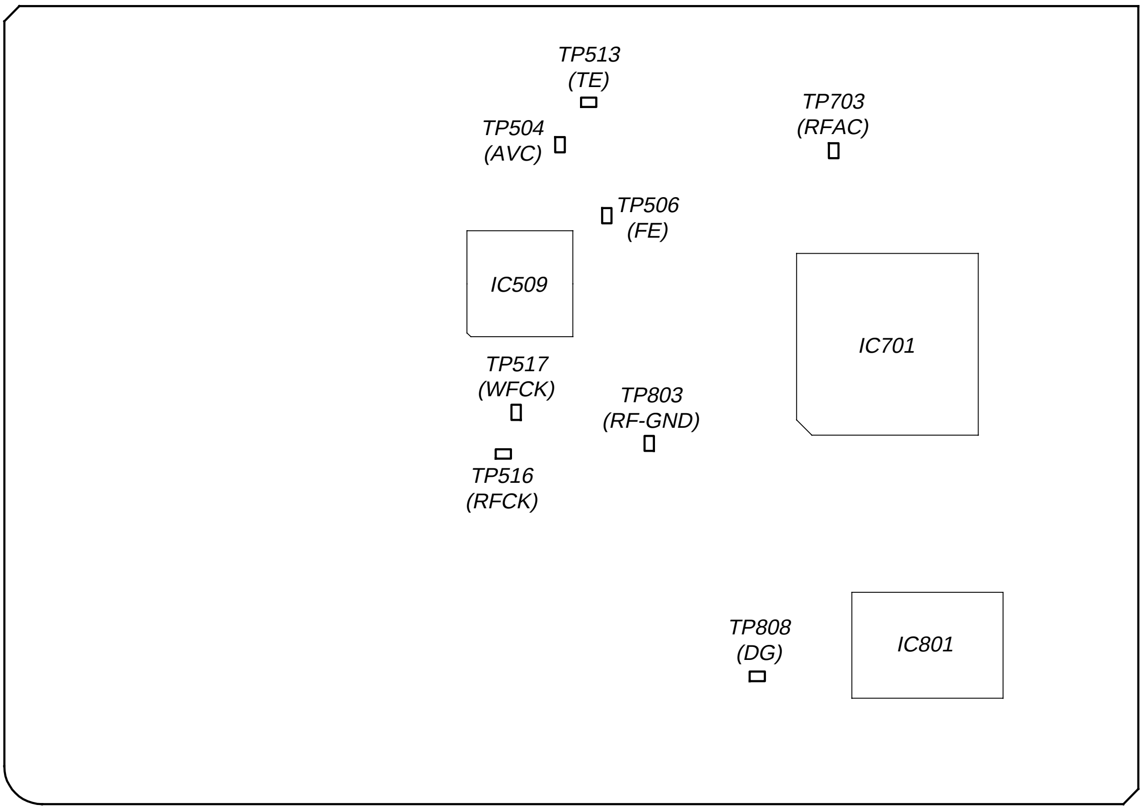

# SECTION 7
# EXPLODED VIEWS

NOTE:
- -XX and -X mean standardized parts, so they may have some difference from the original one.
- Color Indication of Appearance Parts
  Example:
  KNOB, BALANCE (WHITE) . . . (RED)
  ↑ ↑
  Parts Color Cabinet's Color
- Items marked "*" are not stocked since they are seldom required for routine service. Some delay should be anticipated when ordering these items.
- The mechanical parts with no reference number in the exploded views are not supplied.
- Hardware (# mark) list and accessories and packing materials are given in the last of the electrical parts list.

The components identified by mark ⚠ or dotted line with mark ⚠ are critical for safety.
Replace only with part number specified.

## (1) CASE SECTION

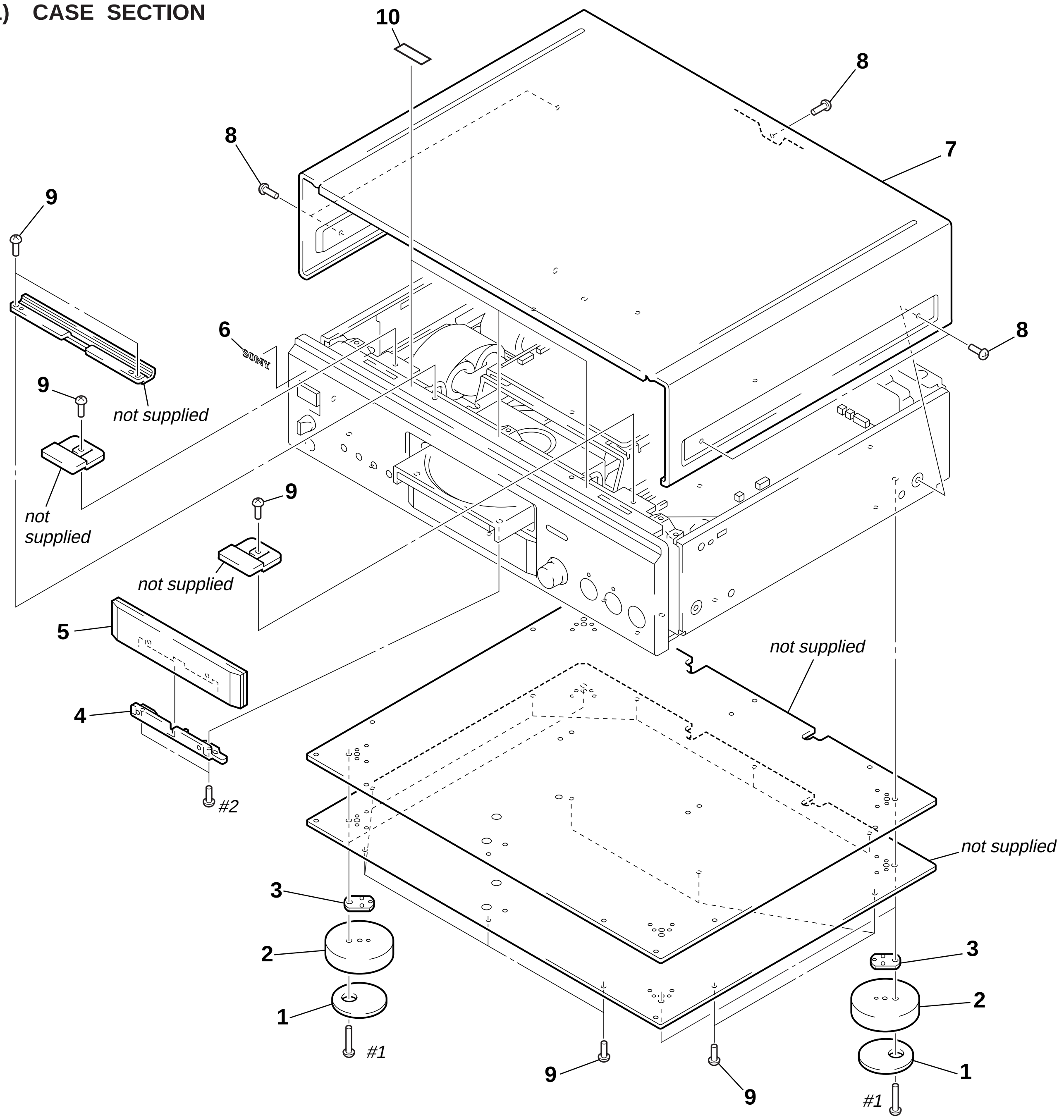


| Ref. No. | Part No. | Description | Remark |
|---|---|---|---|
| 1 | 4-970-124-11 | CUSHION (F50180S) | |
| 2 | 4-970-487-01 | FOOT (F50180S) | |
| 3 | 4-970-488-01 | SPACER (F50180S) | |
| 4 | 4-230-613-01 | BRACKET (LOADING PANEL) | |
| 5 | X-4953-186-1 | PANEL ASSY, LOADING (GOLD) | |
| 5 | X-4953-187-1 | PANEL ASSY, LOADING (BLACK) | |
| 6 | 4-942-568-41 | EMBLEM (NO.5), SONY (BLACK) | |
| 7 | 4-220-301-01 | CASE (GOLD) | |
| 7 | 4-220-301-11 | CASE (BLACK) | |
| 8 | 4-227-843-01 | SCREW (TP), FLAT HEAD (BLACK) | |
| 8 | 4-227-843-11 | SCREW (TP), FLAT HEAD (SILVER)...(GOLD) | |
| 9 | 4-929-074-01 | SCREW (3X8) | |
| 10 | 4-615-354-01 | SPACER | |

## (2) FRONT PANEL SECTION

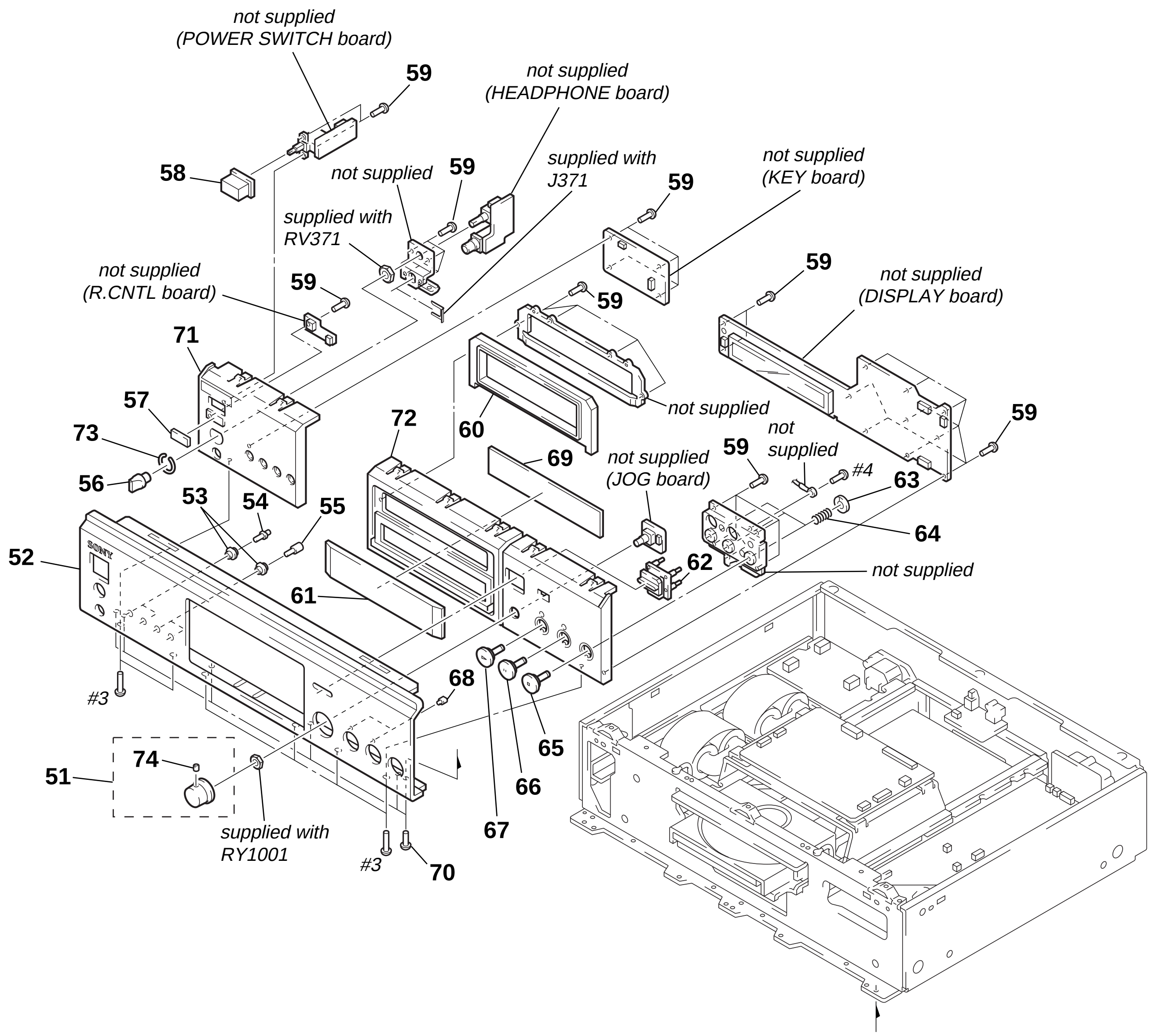


| Ref. No. | Part No. | Description | Remark |
|---|---|---|---|
| 51 | 4-230-637-01 | KNOB (AMS) (GOLD) | |
| 51 | 4-230-637-11 | KNOB (AMS) (BLACK) | |
| 52 | 4-230-614-01 | PANEL, FRONT (GOLD) | |
| 52 | 4-230-614-11 | PANEL, FRONT (BLACK) | |
| 53 | 4-220-711-01 | INDICATOR (FILTER) | |
| 54 | 4-220-317-01 | BUTTON (FILTER) | |
| 55 | 4-230-635-01 | BUTTON (PLAY MODE) | |
| 56 | 4-221-262-01 | KNOB (VOL) (GOLD) | |
| 56 | 4-221-262-11 | KNOB (VOL) (BLACK) | |
| 57 | 4-230-636-01 | PLATE (REMOTE), INDICATION (GOLD) | |
| 57 | 4-230-636-11 | PLATE (REMOTE), INDICATION (BLACK) | |
| 58 | 4-923-520-51 | KNOB, POWER (BLACK) | |
| 58 | 4-923-520-61 | KNOB, POWER (GOLD) | |
| 59 | 4-951-620-01 | SCREW (2.6X8), +BVTP | |
| 60 | 4-230-641-01 | PACKING (LOADING) | |
| 61 | 4-230-631-01 | PLATE, INDICATION (GOLD) | |
| 61 | 4-230-631-11 | PLATE, INDICATION (BLACK) | |
| 62 | X-4953-185-1 | BUTTON (OPN/CLS) ASSY | |

| Ref. No. | Part No. | Description | Remark |
|---|---|---|---|
| 63 | 4-862-338-00 | RING, STOPPER | |
| 64 | 4-230-644-01 | SPRING (BUTTON PLAY) | |
| 65 | X-4953-211-1 | BUTTON (STOP) ASSY (■) (GOLD) | |
| 65 | X-4953-212-1 | BUTTON (STOP) ASSY (■) (BLACK) | |
| 66 | X-4953-209-1 | BUTTON (PAUSE) ASSY (❚❚) (GOLD) | |
| 66 | X-4953-210-1 | BUTTON (PAUSE) ASSY (❚❚) (BLACK) | |
| 67 | X-4953-183-1 | BUTTON (PLAY) ASSY (►) (GOLD) | |
| 67 | X-4953-184-1 | BUTTON (PLAY) ASSY (►) (BLACK) | |
| 68 | 4-230-638-01 | INDICATOR (BUTTON PLAY) | |
| 69 | 4-230-643-01 | FILTER (DISPLAY) | |
| 70 | 4-929-074-01 | SCREW (3X8) | |
| 71 | 4-230-627-01 | BASE (L), PANEL (GOLD) | |
| 71 | 4-230-627-11 | BASE (L), PANEL (BLACK) | |
| 72 | 4-230-628-01 | BASE (R), PANEL (GOLD) | |
| 72 | 4-230-628-11 | BASE (R), PANEL (BLACK) | |
| 73 | 3-354-981-01 | SPRING (SUS), RING | |
| 74 | 3-701-506-01 | SET SCREW, DOUBLE POINT 3X4 | |

## (3) MAIN BOARD SECTION

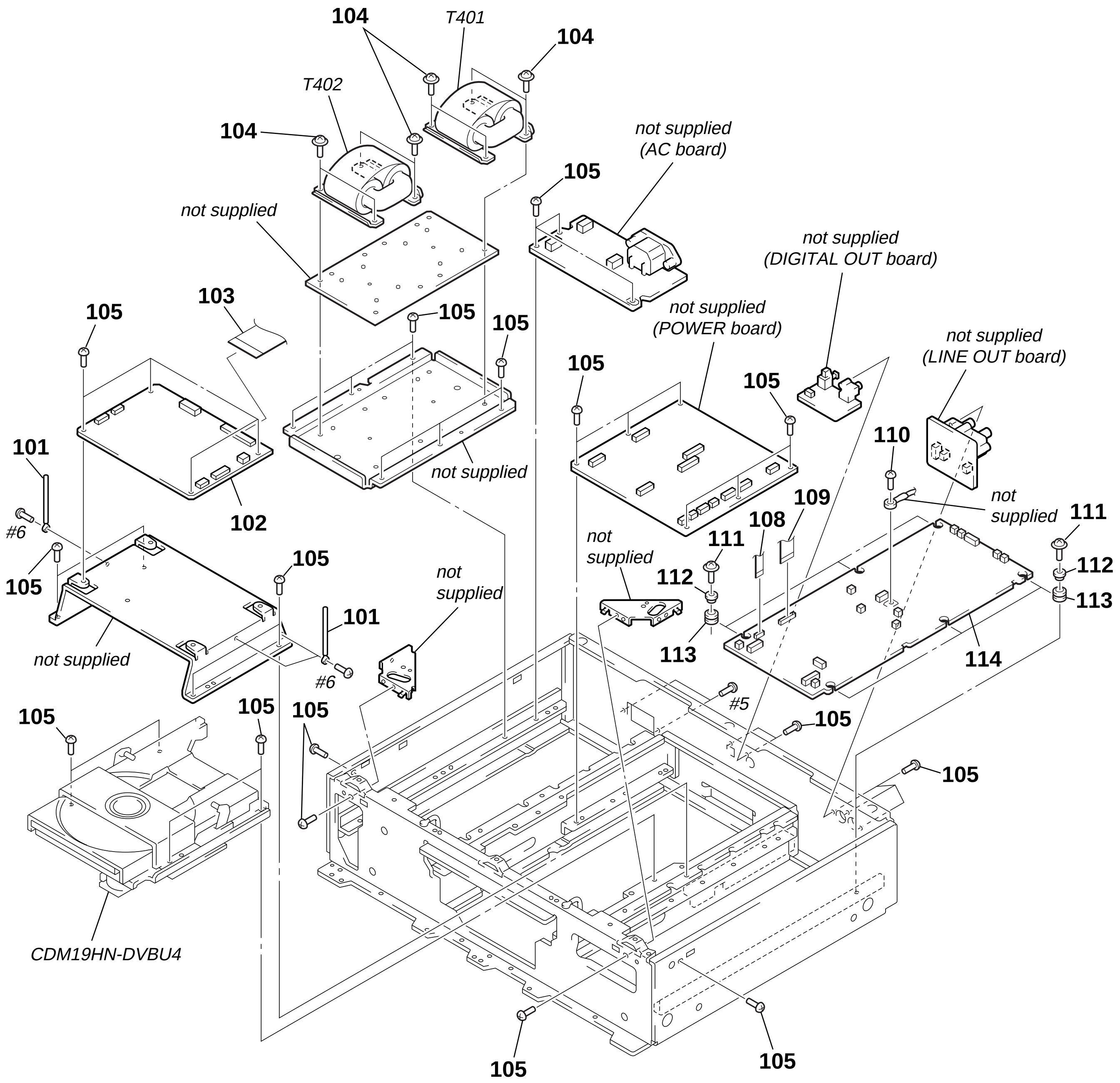


The components identified by mark ⚠ or dotted line with mark ⚠ are critical for safety.
Replace only with part number specified.

| Ref. No. | Part No. | Description | Remark |
|---|---|---|---|
| 101 | 3-701-822-01 | HOLDER, WIRE | |
| 102 | A-4725-362-A | MAIN BOARD, COMPLETE | |
| 103 | 1-757-098-11 | WIRE (FLAT TYPE) (35 CORE) | |
| 104 | 3-703-249-21 | SCREW, S TIGHT, +PTTWH (M3X8) | |
| 105 | 4-929-074-01 | SCREW (3X8) | |
| 108 | 1-757-095-11 | WIRE (FLAT TYPE) (9 CORE) | |
| 109 | 1-757-096-11 | WIRE (FLAT TYPE) (16 CORE) | |
| * 110 | 4-931-964-01 | SCREW (M4) | |
| 111 | 3-905-609-11 | SCREW (TRANSISTOR) | |
| 112 | 4-928-032-01 | COLLAR (A) | |
| * 113 | 4-888-798-00 | BUSHING, RUBBER | |
| 114 | A-4725-539-A | AUDIO BOARD, COMPLETE | |
| ⚠T401 | 1-435-706-11 | TRANSFORMER, POWER (ANALOG) | |
| ⚠T402 | 1-435-707-11 | TRANSFORMER, POWER (DIGITAL) | |

## (4) CHASSIS SECTION

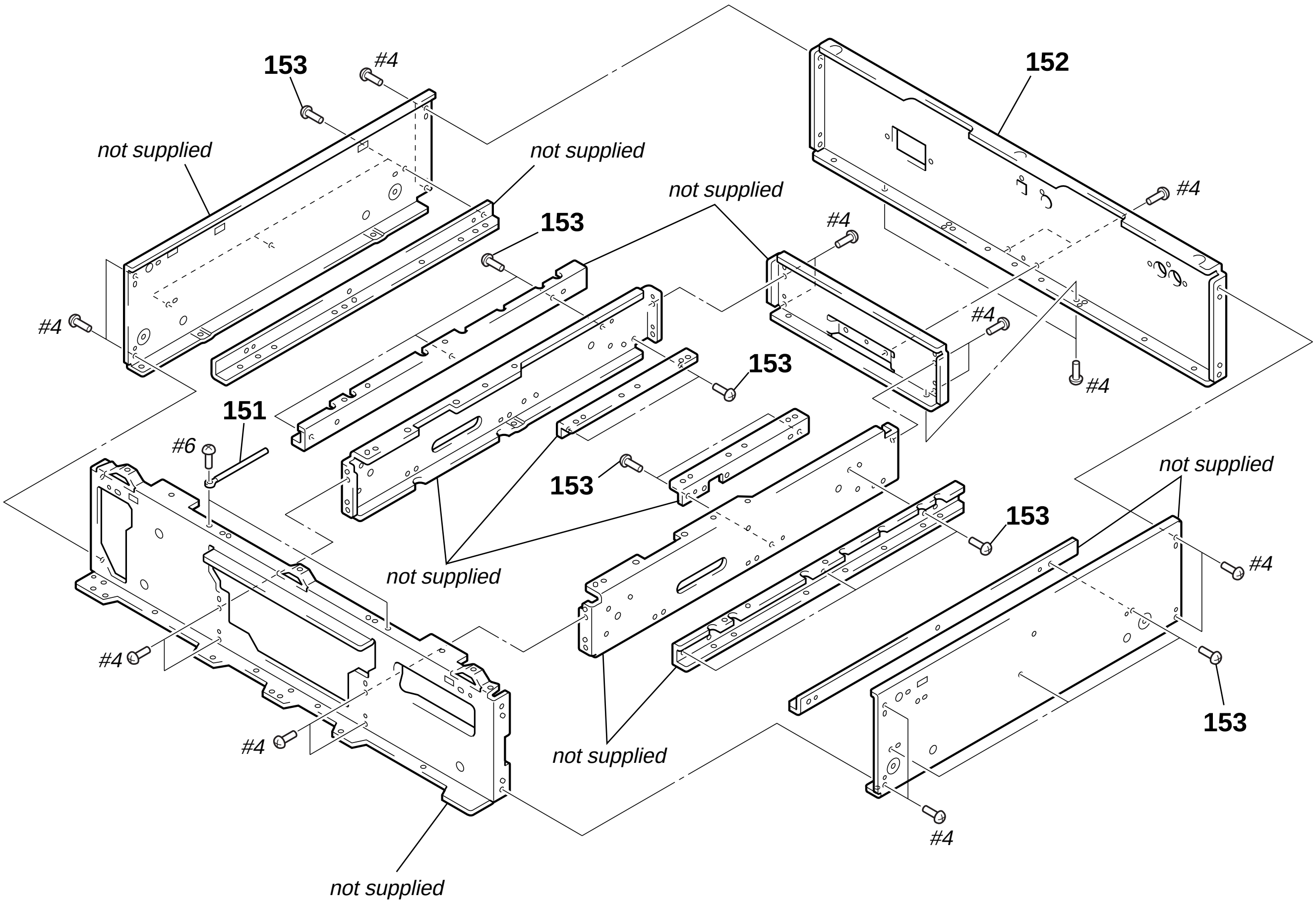


| Ref. No. | Part No. | Description | Remark | Ref. No. | Part No. | Description | Remark |
|---|---|---|---|---|---|---|---|
| 151 | 3-701-822-01 | HOLDER, WIRE | | 153 | 4-929-074-01 | SCREW (3X8) | |
| 152 | 4-230-617-11 | PANEL, BACK | | | | | |

### (5) MECHANISM DECK SECTION (CDM19HN-DVBU4)

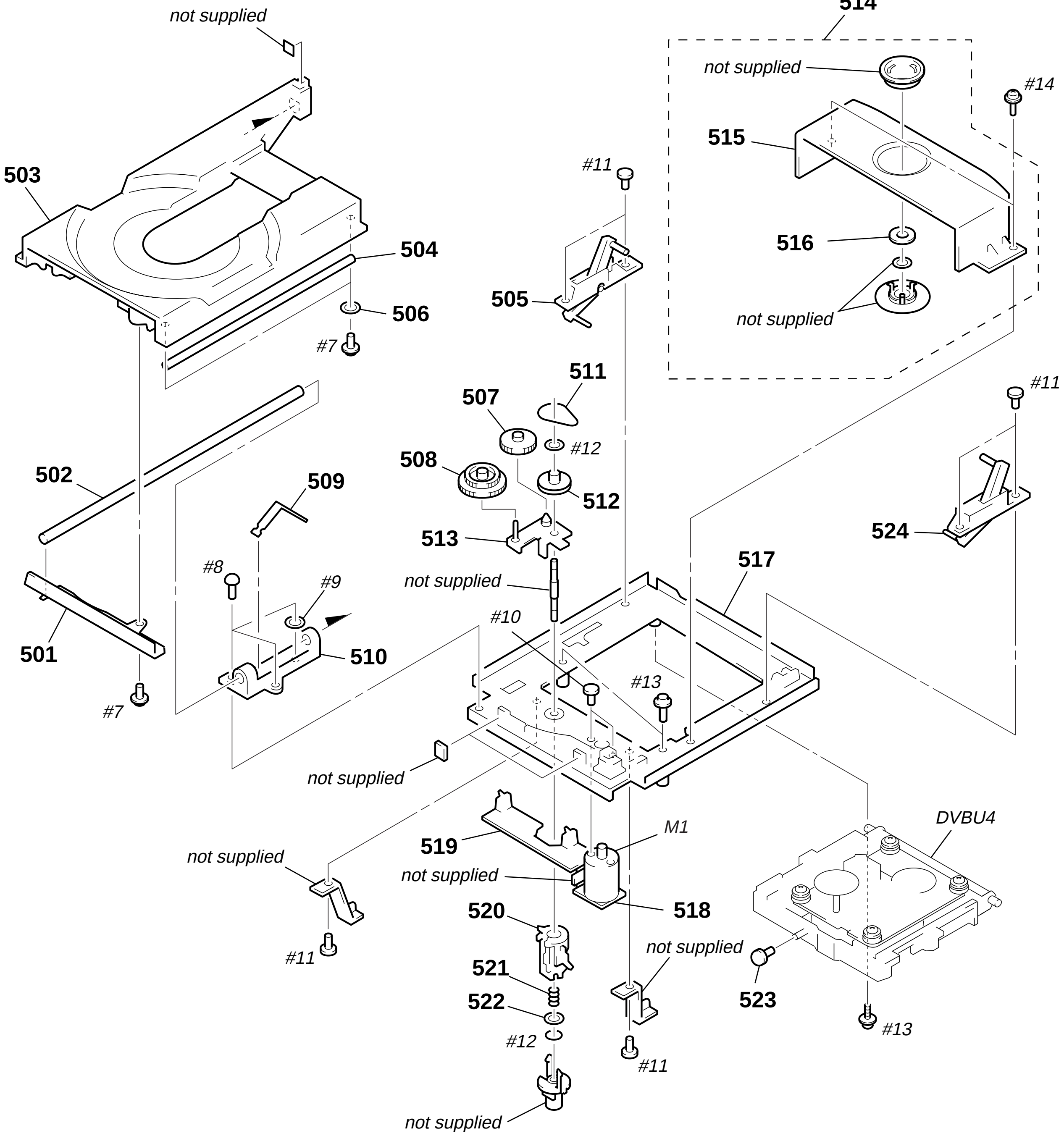


| Ref. No. | Part No. | Description | Remark |
|---|---|---|---|
| 501 | 4-228-673-01 | BRACKET (DISC TABLE) | |
| * 502 | 4-948-368-01 | BAR (MAIN), GUIDE | |
| 503 | 4-948-353-18 | TABLE, DISC | |
| * 504 | 4-948-369-01 | BAR (SUB), GUIDE | |
| 505 | A-4604-913-A | LOCK (L) ASSY, STABLE | |
| 506 | 4-927-318-01 | WASHER | |
| 507 | 4-967-268-01 | GEAR (C) | |
| 508 | 4-927-620-01 | GEAR (P) | |
| * 509 | 4-927-648-01 | SLIDER (GROUND) | |
| * 510 | 4-948-360-01 | BEARING, LOADING | |
| 511 | 4-927-649-01 | BELT | |
| 512 | 4-929-724-01 | PULLEY (B) | |
| 513 | X-4927-608-1 | ARM ASSY, SWING | |
| 514 | A-4672-991-A | HOLDER (A.P.) ASSY | |
| * 515 | 4-948-356-03 | HOLDER (A.P.) | |
| 516 | 3-053-844-01 | YOKE | |
| * 517 | 4-948-355-05 | CHASSIS (OUTSERT) | |
| * 518 | 1-641-765-11 | LOADING MOTOR BOARD | |
| * 519 | 1-641-764-11 | SWITCH BOARD | |
| * 520 | 4-948-371-01 | CAM (BU) | |
| 521 | 3-659-338-00 | SPRING, COMPRESSION | |
| 522 | 4-927-654-01 | WASHER (LIMITER) | |
| 523 | 4-927-631-01 | ROLLER (L) | |
| 524 | A-4604-914-A | LOCK (R) ASSY, STABLE | |
| M1 | A-4604-347-A | MOTOR (L) ASSY (LOADING) | |

## (6) BASE UNIT SECTION (DVBU4)

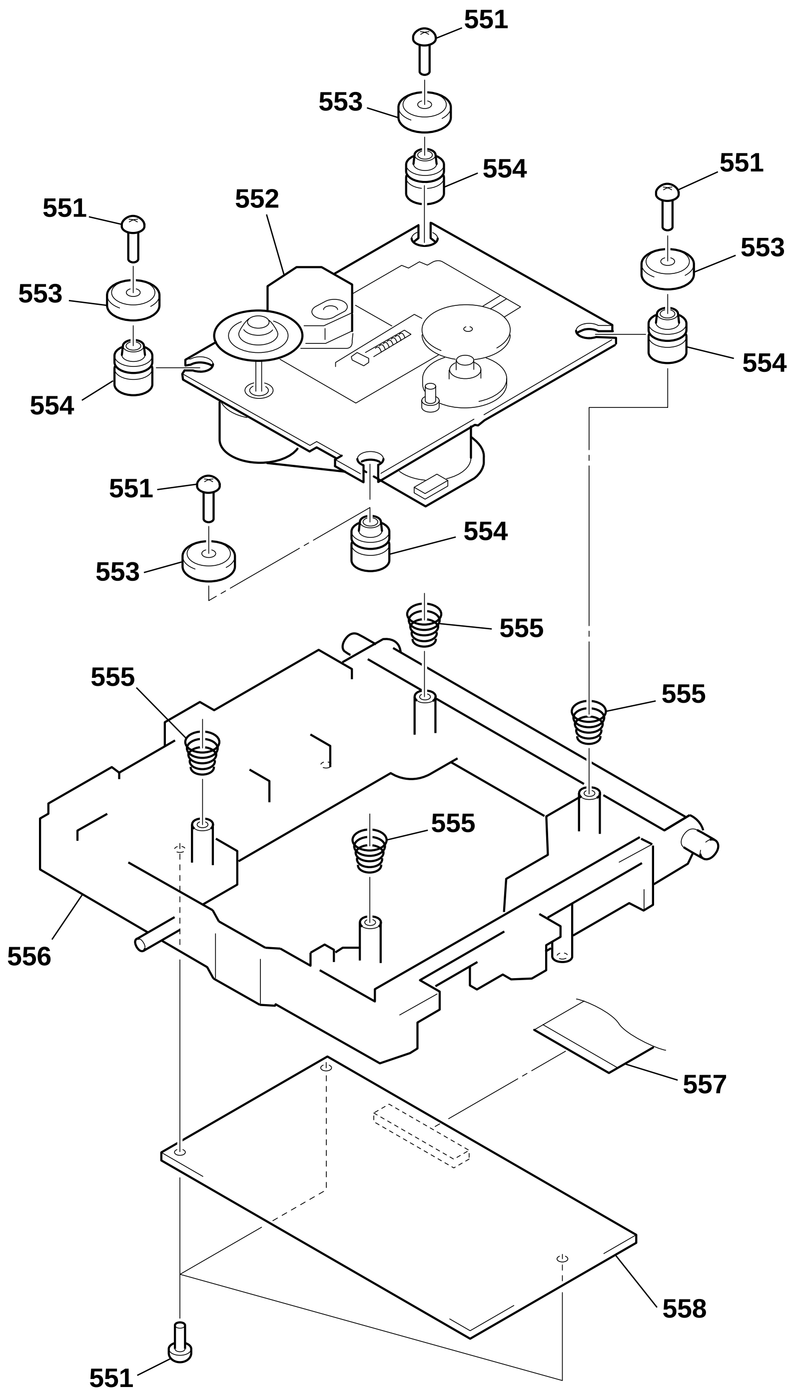


The components identified by mark ⚠ or dotted line with mark ⚠ are critical for safety.
Replace only with part number specified.

| Ref. No. | Part No. | Description | Remark |
|---|---|---|---|
| 551 | 4-951-620-01 | SCREW (2.6X8), +BVTP | |
| ⚠552 | 8-820-132-03 | OPTICAL PICK-UP (KHM-230AAA/J1RP) | |
| 553 | 4-231-925-01 | STOPPER | |
| 554 | 4-227-549-11 | INSULATOR | |
| 555 | 4-231-449-01 | SPRING (230), CONE TYPE COIL | |
| 556 | 4-228-669-01 | HOLDER (KHM230) | |
| 557 | 1-757-097-11 | WIRE (FLAT TYPE) (25 CORE) | |
| 558 | A-4725-382-A | RF BOARD, COMPLETE | |

AC AUDIO

# SECTION 8
# ELECTRICAL PARTS LIST

NOTE:

- Due to standardization, replacements in the parts list may be different from the parts specified in the diagrams or the components used on the set.
- -XX and -X mean standardized parts, so they may have some difference from the original one.
- RESISTORS
  All resistors are in ohms.
  METAL: Metal-film resistor.
  METAL OXIDE: Metal oxide-film resistor.
  F: nonflammable
- Items marked "*" are not stocked since they are seldom required for routine service.
  Some delay should be anticipated when ordering these items.
- SEMICONDUCTORS
  In each case, u: μ, for example:
  uA. . : μA. . uPA. . : μPA. .
  uPB. . : μPB. . uPC. . : μPC. .
  uPD. . : μPD. .
- CAPACITORS
  uF: μF
- COILS
  uH: μH

The components identified by mark ⚠ or dotted line with mark ⚠ are critical for safety.
Replace only with part number specified.

When indicating parts by reference number, please include the board.

| Ref. No. | Part No. | Description | | | Remark |
|---|---|---|---|---|---|
| | | AC BOARD | | | |
| | | ********* | | | |
| | | < CAPACITOR > | | | |
| ⚠C491 | 1-113-927-11 | CERAMIC | 10000PF | 20% | 250V |
| ⚠C492 | 1-113-927-11 | CERAMIC | 10000PF | 20% | 250V |
| ⚠C493 | 1-113-927-11 | CERAMIC | 10000PF | 20% | 250V |
| ⚠C494 | 1-113-927-11 | CERAMIC | 10000PF | 20% | 250V |
| ⚠C495 | 1-113-927-11 | CERAMIC | 10000PF | 20% | 250V |
| ⚠C496 | 1-113-927-11 | CERAMIC | 10000PF | 20% | 250V |
| | | < CONNECTOR > | | | |
| CN491 | 1-770-128-11 | PIN, CONNECTOR 2P | | | |
| * CN492 | 1-564-321-21 | PIN, CONNECTOR 2P | | | |
| CN493 | 1-564-321-00 | PIN, CONNECTOR 2P | | | |
| | | < GROUND TERMINAL > | | | |
| ETP401 | 1-537-770-21 | TERMINAL BOARD, GROUND | | | |
| | | < JACK > | | | |
| ⚠J491 | 1-251-234-11 | INLET, AC (～ AC IN) | | | |
| | | < LINE FILTER > | | | |
| ⚠T491 | 1-421-915-11 | COIL, LINE FILTER | | | |
| ⚠T492 | 1-421-915-11 | COIL, LINE FILTER | | | |
| ************************************************************** | | | | | |
| | A-4725-539-A | AUDIO BOARD, COMPLETE | | | |
| | | ********************** | | | |
| | | < BUS BAR > | | | |
| BB301 | 1-560-242-71 | BUS BAR 6P | | | |
| | | < CAPACITOR > | | | |
| C101 | 1-109-857-11 | ELECT | 47uF | 20% | 63V |
| C102 | 1-136-850-11 | MYLAR | 0.1uF | 5% | 63V |
| C103 | 1-115-197-11 | ELECT | 100uF | 20% | 25V |
| C104 | 1-136-850-11 | MYLAR | 0.1uF | 5% | 63V |
| C105 | 1-136-850-11 | MYLAR | 0.1uF | 5% | 63V |
| C106 | 1-136-850-11 | MYLAR | 0.1uF | 5% | 63V |
| C107 | 1-136-850-11 | MYLAR | 0.1uF | 5% | 63V |
| C108 | 1-130-973-00 | FILM | 0.022uF | 5% | 100V |
| C109 | 1-136-818-11 | FILM | 0.0047uF | 5% | 100V |
| C110 | 1-136-818-11 | FILM | 0.0047uF | 5% | 100V |
| C111 | 1-128-655-21 | FILM | 22PF | 10% | 50V |
| C112 | 1-128-655-21 | FILM | 22PF | 10% | 50V |
| C113 | 1-128-654-21 | FILM | 2200PF | 5% | 50V |
| C114 | 1-107-597-11 | CAPACITOR | 22PF | 5% | 500V |
| C115 | 1-128-654-21 | FILM | 2200PF | 5% | 50V |
| C116 | 1-128-654-21 | FILM | 2200PF | 5% | 50V |
| C117 | 1-107-597-11 | CAPACITOR | 22PF | 5% | 500V |
| C118 | 1-128-654-21 | FILM | 2200PF | 5% | 50V |
| C119 | 1-128-654-21 | FILM | 2200PF | 5% | 50V |
| C120 | 1-125-850-21 | FILM | 220PF | 5% | 50V |
| C122 | 1-128-201-11 | ELECT | 100uF | 20% | 63V |
| C123 | 1-128-201-11 | ELECT | 100uF | 20% | 63V |
| C124 | 1-127-741-41 | FILM | 0.047uF | 10% | 250V |
| C125 | 1-125-859-21 | FILM | 0.001uF | 5% | 50V |
| C126 | 1-109-857-11 | ELECT | 47uF | 20% | 63V |
| C127 | 1-109-857-11 | ELECT | 47uF | 20% | 63V |
| C128 | 1-128-197-11 | ELECT | 10uF | 20% | 63V |
| C129 | 1-128-197-11 | ELECT | 10uF | 20% | 63V |
| C130 | 1-128-197-11 | ELECT | 10uF | 20% | 63V |
| C131 | 1-128-197-11 | ELECT | 10uF | 20% | 63V |
| C161 | 1-102-978-00 | CERAMIC | 220PF | 5% | 50V |
| C162 | 1-102-978-00 | CERAMIC | 220PF | 5% | 50V |
| C163 | 1-119-779-11 | ELECT | 220uF | 20% | 10V |
| C164 | 1-135-743-11 | ELECT | 10uF | | 50V |
| C191 | 1-128-197-11 | ELECT | 10uF | 20% | 63V |
| C192 | 1-128-197-11 | ELECT | 10uF | 20% | 63V |
| C201 | 1-109-857-11 | ELECT | 47uF | 20% | 63V |
| C202 | 1-136-850-11 | MYLAR | 0.1uF | 5% | 63V |
| C203 | 1-115-197-11 | ELECT | 100uF | 20% | 25V |
| C204 | 1-136-850-11 | MYLAR | 0.1uF | 5% | 63V |
| C205 | 1-136-850-11 | MYLAR | 0.1uF | 5% | 63V |
| C206 | 1-136-850-11 | MYLAR | 0.1uF | 5% | 63V |
| C207 | 1-136-850-11 | MYLAR | 0.1uF | 5% | 63V |
| C208 | 1-130-973-00 | FILM | 0.022uF | 5% | 100V |
| C209 | 1-136-818-11 | FILM | 0.0047uF | 5% | 100V |
| C210 | 1-136-818-11 | FILM | 0.0047uF | 5% | 100V |
| C211 | 1-128-655-21 | FILM | 22PF | 10% | 50V |
| C212 | 1-128-655-21 | FILM | 22PF | 10% | 50V |
| C213 | 1-128-654-21 | FILM | 2200PF | 5% | 50V |
| C214 | 1-107-597-11 | CAPACITOR | 22PF | 5% | 500V |
| C215 | 1-128-654-21 | FILM | 2200PF | 5% | 50V |
| C216 | 1-128-654-21 | FILM | 2200PF | 5% | 50V |

| Ref. No. | Part No. | Description | | | Remark |
|---|---|---|---|---|---|
| C217 | 1-107-597-11 | CAPACITOR | 22PF | 5% | 500V |
| C218 | 1-128-654-21 | FILM | 2200PF | 5% | 50V |
| C219 | 1-128-654-21 | FILM | 2200PF | 5% | 50V |
| C220 | 1-125-850-21 | FILM | 220PF | 5% | 50V |
| C222 | 1-128-201-11 | ELECT | 100uF | 20% | 63V |
| C223 | 1-128-201-11 | ELECT | 100uF | 20% | 63V |
| C224 | 1-127-741-41 | FILM | 0.047uF | 10% | 250V |
| C225 | 1-125-859-21 | FILM | 0.001uF | 5% | 50V |
| C226 | 1-109-857-11 | ELECT | 47uF | 20% | 63V |
| C227 | 1-109-857-11 | ELECT | 47uF | 20% | 63V |
| C228 | 1-128-197-11 | ELECT | 10uF | 20% | 63V |
| C229 | 1-128-197-11 | ELECT | 10uF | 20% | 63V |
| C230 | 1-128-197-11 | ELECT | 10uF | 20% | 63V |
| C231 | 1-128-197-11 | ELECT | 10uF | 20% | 63V |
| C261 | 1-102-978-00 | CERAMIC | 220PF | 5% | 50V |
| C262 | 1-102-978-00 | CERAMIC | 220PF | 5% | 50V |
| C263 | 1-119-779-11 | ELECT | 220uF | 20% | 10V |
| C264 | 1-135-743-11 | ELECT | 10uF | | 50V |
| C291 | 1-128-197-11 | ELECT | 10uF | 20% | 63V |
| C292 | 1-128-197-11 | ELECT | 10uF | 20% | 63V |
| C300 | 1-117-720-11 | CERAMIC CHIP | 4.7uF | | 10V |
| C301 | 1-135-673-11 | ELECT | 4700uF | | 10V |
| C302 | 1-135-835-11 | ELECT | 1000uF | | 35V |
| C303 | 1-135-695-11 | ELECT | 3300uF | | 16V |
| C304 | 1-135-695-11 | ELECT | 3300uF | | 16V |
| C305 | 1-135-835-11 | ELECT | 1000uF | | 35V |
| C306 | 1-117-720-11 | CERAMIC CHIP | 4.7uF | | 10V |
| C307 | 1-117-720-11 | CERAMIC CHIP | 4.7uF | | 10V |
| C308 | 1-135-695-11 | ELECT | 3300uF | | 16V |
| C309 | 1-136-850-11 | MYLAR | 0.1uF | 5% | 63V |
| C310 | 1-136-850-11 | MYLAR | 0.1uF | 5% | 63V |
| C311 | 1-117-720-11 | CERAMIC CHIP | 4.7uF | | 10V |
| C312 | 1-136-850-11 | MYLAR | 0.1uF | 5% | 63V |
| C313 | 1-136-850-11 | MYLAR | 0.1uF | 5% | 63V |
| C314 | 1-163-133-00 | CERAMIC CHIP | 470PF | 5% | 50V |
| C315 | 1-117-720-11 | CERAMIC CHIP | 4.7uF | | 10V |
| C316 | 1-117-720-11 | CERAMIC CHIP | 4.7uF | | 10V |
| C317 | 1-107-725-11 | CERAMIC CHIP | 0.1uF | 10% | 16V |
| C318 | 1-127-573-11 | CERAMIC CHIP | 1uF | 10% | 16V |
| C319 | 1-117-720-11 | CERAMIC CHIP | 4.7uF | | 10V |
| C320 | 1-119-793-11 | ELECT | 1000uF | 20% | 16V |
| C321 | 1-135-835-11 | ELECT | 1000uF | | 35V |
| C322 | 1-135-835-11 | ELECT | 1000uF | | 35V |
| C323 | 1-117-720-11 | CERAMIC CHIP | 4.7uF | | 10V |
| C324 | 1-117-720-11 | CERAMIC CHIP | 4.7uF | | 10V |
| C325 | 1-117-720-11 | CERAMIC CHIP | 4.7uF | | 10V |
| C326 | 1-117-720-11 | CERAMIC CHIP | 4.7uF | | 10V |
| C327 | 1-107-725-11 | CERAMIC CHIP | 0.1uF | 10% | 16V |
| C328 | 1-125-781-21 | ELECT | 220uF | 20% | 35V |
| C329 | 1-117-775-31 | FILM | 0.1uF | 10% | 250V |
| C330 | 1-117-720-11 | CERAMIC CHIP | 4.7uF | | 10V |
| C331 | 1-117-720-11 | CERAMIC CHIP | 4.7uF | | 10V |
| C332 | 1-102-951-00 | CERAMIC | 15PF | 5% | 50V |
| C333 | 1-102-942-00 | CERAMIC | 5.0PF | 0.5PF | 50V |
| C334 | 1-163-021-11 | CERAMIC CHIP | 0.01uF | 10% | 50V |
| C335 | 1-117-720-11 | CERAMIC CHIP | 4.7uF | | 10V |
| C339 | 1-127-573-11 | CERAMIC CHIP | 1uF | 10% | 16V |
| C340 | 1-115-197-11 | ELECT | 100uF | 20% | 25V |

| Ref. No. | Part No. | Description | | | Remark |
|---|---|---|---|---|---|
| C341 | 1-107-725-11 | CERAMIC CHIP | 0.1uF | 10% | 16V |
| C342 | 1-109-857-11 | ELECT | 47uF | 20% | 63V |
| C343 | 1-109-857-11 | ELECT | 47uF | 20% | 63V |
| C344 | 1-128-201-11 | ELECT | 100uF | 20% | 63V |
| C345 | 1-128-201-11 | ELECT | 100uF | 20% | 63V |
| C346 | 1-117-720-11 | CERAMIC CHIP | 4.7uF | | 10V |
| C347 | 1-127-573-11 | CERAMIC CHIP | 1uF | 10% | 16V |
| C348 | 1-127-573-11 | CERAMIC CHIP | 1uF | 10% | 16V |
| C349 | 1-107-725-11 | CERAMIC CHIP | 0.1uF | 10% | 16V |
| C351 | 1-115-198-11 | ELECT | 470uF | 20% | 25V |
| C352 | 1-115-198-11 | ELECT | 470uF | 20% | 25V |
| C353 | 1-127-694-91 | ELECT | 47uF | 20% | 25V |
| C354 | 1-127-694-91 | ELECT | 47uF | 20% | 25V |
| C357 | 1-128-091-11 | ELECT | 1000uF | 20% | 50V |
| C358 | 1-128-091-11 | ELECT | 1000uF | 20% | 50V |
| C361 | 1-135-682-11 | ELECT | 220uF | | 25V |
| C362 | 1-135-682-11 | ELECT | 220uF | | 25V |
| C370 | 1-109-857-11 | ELECT | 47uF | 20% | 63V |
| C371 | 1-107-725-11 | CERAMIC CHIP | 0.1uF | 10% | 16V |
| C372 | 1-107-725-11 | CERAMIC CHIP | 0.1uF | 10% | 16V |
| C373 | 1-117-720-11 | CERAMIC CHIP | 4.7uF | | 10V |
| C374 | 1-127-573-11 | CERAMIC CHIP | 1uF | 10% | 16V |
| C375 | 1-107-725-11 | CERAMIC CHIP | 0.1uF | 10% | 16V |
| C376 | 1-127-573-11 | CERAMIC CHIP | 1uF | 10% | 16V |
| C377 | 1-107-725-11 | CERAMIC CHIP | 0.1uF | 10% | 16V |
| C378 | 1-135-835-11 | ELECT | 1000uF | | 35V |
| C379 | 1-135-835-11 | ELECT | 1000uF | | 35V |
| C380 | 1-135-835-11 | ELECT | 1000uF | | 35V |
| C382 | 1-117-720-11 | CERAMIC CHIP | 4.7uF | | 10V |
| C383 | 1-117-720-11 | CERAMIC CHIP | 4.7uF | | 10V |
| C384 | 1-107-725-11 | CERAMIC CHIP | 0.1uF | 10% | 16V |
| C385 | 1-117-720-11 | CERAMIC CHIP | 4.7uF | | 10V |
| C386 | 1-117-720-11 | CERAMIC CHIP | 4.7uF | | 10V |
| C387 | 1-117-720-11 | CERAMIC CHIP | 4.7uF | | 10V |
| C388 | 1-117-720-11 | CERAMIC CHIP | 4.7uF | | 10V |
| C389 | 1-163-021-11 | CERAMIC CHIP | 0.01uF | 10% | 50V |
| C390 | 1-107-725-11 | CERAMIC CHIP | 0.1uF | 10% | 16V |
| C399 | 1-125-859-21 | FILM | 0.001uF | 5% | 50V |
| | | < CONNECTOR > | | | |
| CN101 | 1-564-505-11 | PLUG, CONNECTOR 2P | | | |
| CN102 | 1-564-505-21 | PLUG, CONNECTOR 2P | | | |
| CN201 | 1-564-505-31 | PLUG, CONNECTOR 2P | | | |
| CN202 | 1-564-505-41 | PLUG, CONNECTOR 2P | | | |
| CN301 | 1-564-506-21 | PLUG, CONNECTOR 3P | | | |
| CN302 | 1-564-506-11 | PLUG, CONNECTOR 3P | | | |
| CN303 | 1-564-507-41 | PLUG, CONNECTOR 4P | | | |
| CN304 | 1-564-507-11 | PLUG, CONNECTOR 4P | | | |
| CN305 | 1-564-509-11 | PLUG, CONNECTOR 6P | | | |
| CN306 | 1-568-951-11 | PIN, CONNECTOR 2P | | | |
| CN307 | 1-568-951-21 | PIN, CONNECTOR 2P | | | |
| CN308 | 1-770-640-11 | CONNECTOR, FFC/FPC 9P | | | |
| CN309 | 1-770-646-11 | CONNECTOR, FFC/FPC 16P | | | |
| CN310 | 1-564-505-31 | PLUG, CONNECTOR 2P | | | |
| CN311 | 1-564-505-41 | PLUG, CONNECTOR 2P | | | |
| CN312 | 1-564-505-11 | PLUG, CONNECTOR 2P | | | |

## AUDIO

| Ref. No. | Part No. | Description | | | Remark | |
|---|---|---|---|---|---|---|
| | | < DIODE > | | | | |
| D342 | 8-719-313-73 | DIODE | SFPB-52 | | | |
| D343 | 8-719-313-73 | DIODE | SFPB-52 | | | |
| D351 | 8-719-109-85 | DIODE | RD5.1ESB2 | | | |
| D352 | 8-719-109-85 | DIODE | RD5.1ESB2 | | | |
| D361 | 8-719-988-61 | DIODE | 1SS355TE-17 | | | |
| D362 | 8-719-977-40 | DIODE | DTZ13B | | | |
| | | < RESISTOR > | | | | |
| ⚠FR361 | 1-212-889-00 | FUSIBLE | 220 | 5% | 1/4W | F |
| ⚠FR362 | 1-212-889-00 | FUSIBLE | 220 | 5% | 1/4W | F |
| ⚠FR363 | 1-212-887-11 | FUSIBLE | 180 | 5% | 1/4W | F |
| | | < IC > | | | | |
| IC101 | 8-759-371-51 | IC | CXA8042AS | | | |
| IC103 | 8-759-566-39 | IC | OPA2132UA/2K5 | | | |
| IC104 | 8-759-566-39 | IC | OPA2132UA/2K5 | | | |
| IC105 | 8-759-585-00 | IC | LM6172IMX | | | |
| IC106 | 8-759-585-00 | IC | LM6172IMX | | | |
| IC107 | 8-759-566-39 | IC | OPA2132UA/2K5 | | | |
| IC201 | 8-759-371-51 | IC | CXA8042AS | | | |
| IC203 | 8-759-566-39 | IC | OPA2132UA/2K5 | | | |
| IC204 | 8-759-566-39 | IC | OPA2132UA/2K5 | | | |
| IC205 | 8-759-585-00 | IC | LM6172IMX | | | |
| IC206 | 8-759-585-00 | IC | LM6172IMX | | | |
| IC207 | 8-759-566-39 | IC | OPA2132UA/2K5 | | | |
| IC301 | 8-759-573-17 | IC | CXD8762AQ | | | |
| IC302 | 8-759-596-81 | IC | CXD9521Q | | | |
| IC305 | 8-759-231-53 | IC | TA7805S | | | |
| IC306 | 8-759-711-59 | IC | NJM78L05UA-TE1 | | | |
| IC307 | 8-759-604-86 | IC | M5F7807L | | | |
| IC308 | 8-759-604-90 | IC | M5F7907L | | | |
| IC309 | 8-759-711-59 | IC | NJM78L05UA-TE1 | | | |
| IC310 | 8-759-296-74 | IC | AD712JR-REEL | | | |
| IC312 | 8-759-486-55 | IC | NJM2370U33-TE2 | | | |
| IC313 | 8-759-591-61 | IC | TC7WHU04FU (TE12R) | | | |
| IC341 | 8-759-566-39 | IC | OPA2132UA/2K5 | | | |
| IC342 | 8-759-566-39 | IC | OPA2132UA/2K5 | | | |
| IC361 | 8-759-711-85 | IC | NJM4580E-D | | | |
| | | < SHORT > | | | | |
| JW306 | 1-216-295-11 | SHORT | 0 | | | |
| JW307 | 1-216-295-11 | SHORT | 0 | | | |
| JW308 | 1-216-295-11 | SHORT | 0 | | | |
| | | < COIL > | | | | |
| L101 | 1-410-757-21 | INDUCTOR CHIP | 0.33mH | | | |
| L131 | 1-414-234-22 | FERRITE BEAD | 0uH | | | |
| L132 | 1-414-234-22 | FERRITE BEAD | 0uH | | | |
| L161 | 1-414-512-21 | INDUCTOR CHIP | 6.8uH | | | |
| L162 | 1-414-512-21 | INDUCTOR CHIP | 6.8uH | | | |
| L163 | 1-414-512-21 | INDUCTOR CHIP | 6.8uH | | | |
| L201 | 1-410-757-21 | INDUCTOR CHIP | 0.33mH | | | |
| L231 | 1-414-234-22 | FERRITE BEAD | 0uH | | | |
| L232 | 1-414-234-22 | FERRITE BEAD | 0uH | | | |
| L261 | 1-414-512-21 | INDUCTOR CHIP | 6.8uH | | | |
| L262 | 1-414-512-21 | INDUCTOR CHIP | 6.8uH | | | |

| Ref. No. | Part No. | Description | | | Remark |
|---|---|---|---|---|---|
| L263 | 1-414-512-21 | INDUCTOR CHIP | 6.8uH | | |
| L301 | 1-414-234-22 | FERRITE BEAD | 0uH | | |
| L310 | 1-424-090-11 | COIL, LINE FILTER | | | |
| L311 | 1-424-090-11 | COIL, LINE FILTER | | | |
| L312 | 1-424-090-11 | COIL, LINE FILTER | | | |
| L313 | 1-424-090-11 | COIL, LINE FILTER | | | |
| L314 | 1-424-090-11 | COIL, LINE FILTER | | | |
| L315 | 1-424-090-11 | COIL, LINE FILTER | | | |
| L316 | 1-424-090-11 | COIL, LINE FILTER | | | |
| L317 | 1-414-234-22 | FERRITE BEAD | 0uH | | |
| L318 | 1-424-090-11 | COIL, LINE FILTER | | | |
| L319 | 1-424-090-11 | COIL, LINE FILTER | | | |
| L320 | 1-424-090-11 | COIL, LINE FILTER | | | |
| L321 | 1-424-090-11 | COIL, LINE FILTER | | | |
| L323 | 1-424-090-11 | COIL, LINE FILTER | | | |
| L378 | 1-414-234-22 | FERRITE BEAD | 0uH | | |
| L379 | 1-414-234-22 | FERRITE BEAD | 0uH | | |
| L399 | 1-410-993-42 | INDUCTOR CHIP | 1uH | | |
| | | < TRANSISTOR > | | | |
| Q101 | 8-729-209-74 | TRANSISTOR | 2SA1213Y-TE12R | | |
| Q102 | 8-729-202-05 | TRANSISTOR | 2SC2873O-0 | | |
| Q103 | 8-729-202-05 | TRANSISTOR | 2SC2873O-0 | | |
| Q161 | 8-729-231-55 | TRANSISTOR | 2SC2878-AB | | |
| Q201 | 8-729-209-74 | TRANSISTOR | 2SA1213Y-TE12R | | |
| Q202 | 8-729-202-05 | TRANSISTOR | 2SC2873O-0 | | |
| Q203 | 8-729-202-05 | TRANSISTOR | 2SC2873O-0 | | |
| Q261 | 8-729-231-55 | TRANSISTOR | 2SC2878-AB | | |
| Q351 | 8-729-036-56 | FET | 2SK208-GR-TE85L | | |
| Q352 | 8-729-036-56 | FET | 2SK208-GR-TE85L | | |
| Q353 | 8-729-107-53 | TRANSISTOR | 2SC2275A | | |
| Q354 | 8-729-141-10 | TRANSISTOR | 2SA985A-QP | | |
| Q355 | 8-729-107-53 | TRANSISTOR | 2SC2275A | | |
| Q356 | 8-729-141-10 | TRANSISTOR | 2SA985A-QP | | |
| Q361 | 8-729-027-29 | TRANSISTOR | DTA123JKA-T146 | | |
| Q362 | 8-729-027-29 | TRANSISTOR | DTA123JKA-T146 | | |
| | | < RESISTOR > | | | |
| R100 | 1-259-999-11 | CARBON MELF | 2.2K | 2% | 1/8W |
| R101 | 1-216-021-00 | METAL CHIP | 68 | 5% | 1/10W |
| R102 | 1-216-021-00 | METAL CHIP | 68 | 5% | 1/10W |
| R103 | 1-216-021-00 | METAL CHIP | 68 | 5% | 1/10W |
| R104 | 1-216-021-00 | METAL CHIP | 68 | 5% | 1/10W |
| R106 | 1-259-919-11 | CARBON MELF | 510 | 2% | 1/8W |
| R107 | 1-259-991-11 | CARBON MELF | 470 | 2% | 1/8W |
| R110 | 1-259-971-11 | CARBON MELF | 10 | 2% | 1/8W |
| R111 | 1-259-971-11 | CARBON MELF | 10 | 2% | 1/8W |
| R112 | 1-259-971-11 | CARBON MELF | 10 | 2% | 1/8W |
| R113 | 1-259-971-11 | CARBON MELF | 10 | 2% | 1/8W |
| R114 | 1-259-547-11 | CARBON | 470 | 1% | 1/2W |
| R115 | 1-259-547-11 | CARBON | 470 | 1% | 1/2W |
| R116 | 1-259-581-11 | CARBON | 12K | 1% | 1/2W |
| R117 | 1-259-581-11 | CARBON | 12K | 1% | 1/2W |
| R118 | 1-259-579-11 | CARBON | 10K | 1% | 1/2W |
| R119 | 1-259-579-11 | CARBON | 10K | 1% | 1/2W |
| R120 | 1-259-562-11 | CARBON | 2K | 1% | 1/2W |
| R121 | 1-259-924-11 | CARBON MELF | 1.3K | 2% | 1/8W |
| R122 | 1-259-924-11 | CARBON MELF | 1.3K | 2% | 1/8W |

The components identified by mark ⚠ or dotted line with mark ⚠ are critical for safety.
Replace only with part number specified.

| Ref. No. | Part No. | Description | | | Remark |
|---|---|---|---|---|---|
| R123 | 1-259-999-11 | CARBON MELF | 2.2K | 2% | 1/8W |
| R124 | 1-259-561-11 | CARBON | 1.8K | 1% | 1/2W |
| R125 | 1-259-924-11 | CARBON MELF | 1.3K | 2% | 1/8W |
| R126 | 1-259-924-11 | CARBON MELF | 1.3K | 2% | 1/8W |
| R127 | 1-259-996-11 | CARBON MELF | 1.2K | 2% | 1/8W |
| R128 | 1-259-545-91 | CARBON | 390 | 1% | 1/2W |
| R129 | 1-259-591-11 | CARBON | 33K | 1% | 1/2W |
| R130 | 1-259-563-11 | CARBON | 2.2K | 1% | 1/2W |
| R131 | 1-259-507-11 | CARBON | 10 | 1% | 1/2W |
| R132 | 1-259-975-11 | CARBON MELF | 22 | 2% | 1/8W |
| R133 | 1-259-975-11 | CARBON MELF | 22 | 2% | 1/8W |
| R161 | 1-260-020-11 | CARBON MELF | 100K | 2% | 1/8W |
| R162 | 1-260-004-11 | CARBON MELF | 4.7K | 2% | 1/8W |
| R163 | 1-260-010-11 | CARBON MELF | 15K | 2% | 1/8W |
| R164 | 1-260-010-11 | CARBON MELF | 15K | 2% | 1/8W |
| R165 | 1-260-016-11 | CARBON MELF | 47K | 2% | 1/8W |
| R166 | 1-259-979-11 | CARBON MELF | 47 | 2% | 1/8W |
| R167 | 1-216-061-00 | METAL CHIP | 3.3K | 5% | 1/10W |
| R200 | 1-259-999-11 | CARBON MELF | 2.2K | 2% | 1/8W |
| R201 | 1-216-021-00 | METAL CHIP | 68 | 5% | 1/10W |
| R202 | 1-216-021-00 | METAL CHIP | 68 | 5% | 1/10W |
| R203 | 1-216-021-00 | METAL CHIP | 68 | 5% | 1/10W |
| R204 | 1-216-021-00 | METAL CHIP | 68 | 5% | 1/10W |
| R206 | 1-259-919-11 | CARBON MELF | 510 | 2% | 1/8W |
| R207 | 1-259-991-11 | CARBON MELF | 470 | 2% | 1/8W |
| R210 | 1-259-971-11 | CARBON MELF | 10 | 2% | 1/8W |
| R211 | 1-259-971-11 | CARBON MELF | 10 | 2% | 1/8W |
| R212 | 1-259-971-11 | CARBON MELF | 10 | 2% | 1/8W |
| R213 | 1-259-971-11 | CARBON MELF | 10 | 2% | 1/8W |
| R214 | 1-259-547-11 | CARBON | 470 | 1% | 1/2W |
| R215 | 1-259-547-11 | CARBON | 470 | 1% | 1/2W |
| R216 | 1-259-581-11 | CARBON | 12K | 1% | 1/2W |
| R217 | 1-259-581-11 | CARBON | 12K | 1% | 1/2W |
| R218 | 1-259-579-11 | CARBON | 10K | 1% | 1/2W |
| R219 | 1-259-579-11 | CARBON | 10K | 1% | 1/2W |
| R220 | 1-259-562-11 | CARBON | 2K | 1% | 1/2W |
| R221 | 1-259-924-11 | CARBON MELF | 1.3K | 2% | 1/8W |
| R222 | 1-259-924-11 | CARBON MELF | 1.3K | 2% | 1/8W |
| R223 | 1-259-999-11 | CARBON MELF | 2.2K | 2% | 1/8W |
| R224 | 1-259-561-11 | CARBON | 1.8K | 1% | 1/2W |
| R225 | 1-259-924-11 | CARBON MELF | 1.3K | 2% | 1/8W |
| R226 | 1-259-924-11 | CARBON MELF | 1.3K | 2% | 1/8W |
| R227 | 1-259-996-11 | CARBON MELF | 1.2K | 2% | 1/8W |
| R228 | 1-259-545-91 | CARBON | 390 | 1% | 1/2W |
| R229 | 1-259-591-11 | CARBON | 33K | 1% | 1/2W |
| R230 | 1-259-563-11 | CARBON | 2.2K | 1% | 1/2W |
| R231 | 1-259-507-11 | CARBON | 10 | 1% | 1/2W |
| R232 | 1-259-975-11 | CARBON MELF | 22 | 2% | 1/8W |
| R233 | 1-259-975-11 | CARBON MELF | 22 | 2% | 1/8W |
| R261 | 1-260-020-11 | CARBON MELF | 100K | 2% | 1/8W |
| R262 | 1-260-004-11 | CARBON MELF | 4.7K | 2% | 1/8W |
| R263 | 1-260-010-11 | CARBON MELF | 15K | 2% | 1/8W |
| R264 | 1-260-010-11 | CARBON MELF | 15K | 2% | 1/8W |
| R265 | 1-260-016-11 | CARBON MELF | 47K | 2% | 1/8W |
| R266 | 1-259-979-11 | CARBON MELF | 47 | 2% | 1/8W |
| R267 | 1-216-061-00 | METAL CHIP | 3.3K | 5% | 1/10W |
| R301 | 1-216-033-00 | METAL CHIP | 220 | 5% | 1/10W |

| Ref. No. | Part No. | Description | | | Remark |
|---|---|---|---|---|---|
| R302 | 1-216-033-00 | METAL CHIP | 220 | 5% | 1/10W |
| R303 | 1-216-033-00 | METAL CHIP | 220 | 5% | 1/10W |
| R304 | 1-216-033-00 | METAL CHIP | 220 | 5% | 1/10W |
| R305 | 1-216-037-00 | METAL CHIP | 330 | 5% | 1/10W |
| R306 | 1-216-033-00 | METAL CHIP | 220 | 5% | 1/10W |
| R307 | 1-216-033-00 | METAL CHIP | 220 | 5% | 1/10W |
| R308 | 1-216-033-00 | METAL CHIP | 220 | 5% | 1/10W |
| R309 | 1-216-033-00 | METAL CHIP | 220 | 5% | 1/10W |
| R310 | 1-216-033-00 | METAL CHIP | 220 | 5% | 1/10W |
| R311 | 1-216-049-11 | RES-CHIP | 1K | 5% | 1/10W |
| R314 | 1-216-033-00 | METAL CHIP | 220 | 5% | 1/10W |
| R319 | 1-216-041-00 | METAL CHIP | 470 | 5% | 1/10W |
| R324 | 1-216-073-00 | METAL CHIP | 10K | 5% | 1/10W |
| R325 | 1-216-073-00 | METAL CHIP | 10K | 5% | 1/10W |
| R326 | 1-216-073-00 | METAL CHIP | 10K | 5% | 1/10W |
| R327 | 1-216-033-00 | METAL CHIP | 220 | 5% | 1/10W |
| R328 | 1-216-033-00 | METAL CHIP | 220 | 5% | 1/10W |
| R329 | 1-216-298-00 | METAL CHIP | 2.2 | 5% | 1/10W |
| R330 | 1-216-073-00 | METAL CHIP | 10K | 5% | 1/10W |
| R331 | 1-260-032-11 | CARBON MELF | 1M | 2% | 1/8W |
| R338 | 1-216-298-00 | METAL CHIP | 2.2 | 5% | 1/10W |
| R339 | 1-216-298-00 | METAL CHIP | 2.2 | 5% | 1/10W |
| R340 | 1-216-001-00 | METAL CHIP | 10 | 5% | 1/10W |
| R341 | 1-259-979-11 | CARBON MELF | 47 | 2% | 1/8W |
| R342 | 1-259-991-11 | CARBON MELF | 470 | 2% | 1/8W |
| R343 | 1-259-995-11 | CARBON MELF | 1K | 2% | 1/8W |
| R344 | 1-259-995-11 | CARBON MELF | 1K | 2% | 1/8W |
| R345 | 1-259-983-11 | CARBON MELF | 100 | 2% | 1/8W |
| R346 | 1-259-996-11 | CARBON MELF | 1.2K | 2% | 1/8W |
| R347 | 1-259-922-11 | CARBON MELF | 910 | 2% | 1/8W |
| R348 | 1-259-979-11 | CARBON MELF | 47 | 2% | 1/8W |
| R349 | 1-259-991-11 | CARBON MELF | 470 | 2% | 1/8W |
| R350 | 1-259-995-11 | CARBON MELF | 1K | 2% | 1/8W |
| R351 | 1-259-995-11 | CARBON MELF | 1K | 2% | 1/8W |
| R352 | 1-259-983-11 | CARBON MELF | 100 | 2% | 1/8W |
| R353 | 1-259-996-11 | CARBON MELF | 1.2K | 2% | 1/8W |
| R354 | 1-259-922-11 | CARBON MELF | 910 | 2% | 1/8W |
| R355 | 1-216-001-00 | METAL CHIP | 10 | 5% | 1/10W |
| R356 | 1-216-298-00 | METAL CHIP | 2.2 | 5% | 1/10W |
| R362 | 1-216-105-00 | RES-CHIP | 220K | 5% | 1/10W |
| R363 | 1-216-081-00 | METAL CHIP | 22K | 5% | 1/10W |
| R364 | 1-216-097-11 | RES-CHIP | 100K | 5% | 1/10W |
| R372 | 1-216-019-00 | METAL CHIP | 56 | 5% | 1/10W |
| R373 | 1-216-009-00 | RES-CHIP | 22 | 5% | 1/10W |
| R374 | 1-216-009-00 | RES-CHIP | 22 | 5% | 1/10W |
| R375 | 1-216-009-00 | RES-CHIP | 22 | 5% | 1/10W |
| R376 | 1-216-009-00 | RES-CHIP | 22 | 5% | 1/10W |
| R378 | 1-216-298-00 | METAL CHIP | 2.2 | 5% | 1/10W |
| R393 | 1-216-298-00 | METAL CHIP | 2.2 | 5% | 1/10W |
| R394 | 1-216-033-00 | METAL CHIP | 220 | 5% | 1/10W |
| R395 | 1-216-033-00 | METAL CHIP | 220 | 5% | 1/10W |
| R396 | 1-216-033-00 | METAL CHIP | 220 | 5% | 1/10W |
| R397 | 1-216-033-00 | METAL CHIP | 220 | 5% | 1/10W |
| R398 | 1-216-033-00 | METAL CHIP | 220 | 5% | 1/10W |
| R399 | 1-259-989-11 | CARBON MELF | 330 | 2% | 1/8W |

| | Ref. No. | Part No. | Description | | | Remark |
|---|---|---|---|---|---|---|
| | | | < VIBRATOR > | | | |
| | X301 | 1-781-998-11 | VIBRATOR, CRYSTAL (45MHz) | | | |
| | | | ************************************************************ | | | |
| | | | DIGITAL OUT BOARD | | | |
| | | | ***************** | | | |
| | | | < CAPACITOR > | | | |
| | C391 | 1-136-850-11 | MYLAR | 0.1uF | 5% | 63V |
| | C392 | 1-104-645-11 | CERAMIC | 1uF | 20% | 50V |
| | C393 | 1-163-251-11 | CERAMIC CHIP | 100PF | 5% | 50V |
| | C394 | 1-164-732-11 | CERAMIC | 0.1uF | 20% | 50V |
| | C395 | 1-164-732-11 | CERAMIC | 0.1uF | 20% | 50V |
| | C396 | 1-107-611-11 | CAPACITOR | 100PF | 5% | 500V |
| | C397 | 1-136-850-11 | MYLAR | 0.1uF | 5% | 63V |
| | C398 | 1-135-743-11 | ELECT | 10uF | | 50V |
| | | | < CONNECTOR > | | | |
| | CN391 | 1-506-468-11 | PIN, CONNECTOR 3P | | | |
| | | | < IC > | | | |
| | IC391 | 8-759-591-61 | IC TC7WHU04FU (TE12R) | | | |
| | IC392 | 8-749-012-69 | IC GP1F38T (DIGITAL (CD) OUT OPTICAL) | | | |
| | | | < JACK > | | | |
| | J391 | 1-770-905-21 | JACK, PIN 1P (DIGITAL (CD) OUT COAXIAL) | | | |
| | | | < RESISTOR > | | | |
| | R391 | 1-216-033-00 | METAL CHIP | 220 | 5% | 1/10W |
| | R392 | 1-216-022-00 | METAL CHIP | 75 | 5% | 1/10W |
| | | | < COIL > | | | |
| | T391 | 1-416-701-11 | COIL (WITH CORE) | | | |
| | | | ************************************************************ | | | |
| | | | DISPLAY BOARD | | | |
| | | | ************** | | | |
| * | | 3-362-478-01 | HOLDER (T) , LED | | | |
| * | | 4-945-292-01 | HOLDER, INDICATION TUBE | | | |
| | | | < CAPACITOR > | | | |
| | C1001 | 1-126-177-11 | ELECT | 100uF | 20% | 10V |
| | C1002 | 1-107-725-11 | CERAMIC CHIP | 0.1uF | 10% | 16V |
| | C1003 | 1-107-725-11 | CERAMIC CHIP | 0.1uF | 10% | 16V |
| | C1004 | 1-163-243-11 | CERAMIC CHIP | 47PF | 5% | 50V |
| | C1005 | 1-163-009-11 | CERAMIC CHIP | 0.001uF | 10% | 50V |
| | C1006 | 1-107-725-11 | CERAMIC CHIP | 0.1uF | 10% | 16V |
| | C1007 | 1-107-725-11 | CERAMIC CHIP | 0.1uF | 10% | 16V |
| | C1008 | 1-107-725-11 | CERAMIC CHIP | 0.1uF | 10% | 16V |
| | C1010 | 1-163-009-11 | CERAMIC CHIP | 0.001uF | 10% | 50V |
| | C1011 | 1-163-009-11 | CERAMIC CHIP | 0.001uF | 10% | 50V |
| | C1012 | 1-163-009-11 | CERAMIC CHIP | 0.001uF | 10% | 50V |
| | C1013 | 1-163-009-11 | CERAMIC CHIP | 0.001uF | 10% | 50V |
| | C1014 | 1-163-009-11 | CERAMIC CHIP | 0.001uF | 10% | 50V |
| | C1015 | 1-163-009-11 | CERAMIC CHIP | 0.001uF | 10% | 50V |
| | C1016 | 1-163-009-11 | CERAMIC CHIP | 0.001uF | 10% | 50V |
| | C1017 | 1-163-009-11 | CERAMIC CHIP | 0.001uF | 10% | 50V |
| | C1018 | 1-163-009-11 | CERAMIC CHIP | 0.001uF | 10% | 50V |
| | C1019 | 1-163-009-11 | CERAMIC CHIP | 0.001uF | 10% | 50V |
| | C1020 | 1-107-725-11 | CERAMIC CHIP | 0.1uF | 10% | 16V |
| | C1080 | 1-107-725-11 | CERAMIC CHIP | 0.1uF | 10% | 16V |
| | | | < CONNECTOR > | | | |
| * | CN1001 | 1-568-944-11 | PIN, CONNECTOR 6P | | | |
| | CN1002 | 1-794-706-11 | PIN, CONNECTOR 7P | | | |
| | CN1003 | 1-793-673-11 | CONNECTOR, BOARD TO BOARD 7P | | | |
| * | CN1007 | 1-568-942-11 | PIN, CONNECTOR 4P | | | |
| | | | < DIODE > | | | |
| | D1003 | 8-719-301-44 | LED SEL2410E-D (►) | | | |
| | D1004 | 8-719-301-60 | LED SEL2910A-C (❚❚) | | | |
| | D1005 | 8-719-988-61 | DIODE 1SS355TE-17 | | | |
| | | | < FLUORESCENT INDICATOR TUBE > | | | |
| | FL1001 | 1-518-709-11 | INDICATOR TUBE, FLUORESCENT | | | |
| | | | < IC > | | | |
| | IC1001 | 8-752-908-75 | IC CXP84120-088Q | | | |
| | IC1002 | 8-759-583-23 | IC MSM9201-03GS-K | | | |
| | | | < TRANSISTOR > | | | |
| | Q1001 | 8-729-120-28 | TRANSISTOR | 2SC1623-L5L6 | | |
| | Q1002 | 8-729-120-28 | TRANSISTOR | 2SC1623-L5L6 | | |
| | Q1003 | 8-729-120-28 | TRANSISTOR | 2SC1623-L5L6 | | |
| | Q1004 | 8-729-120-28 | TRANSISTOR | 2SC1623-L5L6 | | |
| | Q1005 | 8-729-120-28 | TRANSISTOR | 2SC1623-L5L6 | | |
| | Q1006 | 8-729-120-28 | TRANSISTOR | 2SC1623-L5L6 | | |
| | Q1007 | 8-729-120-28 | TRANSISTOR | 2SC1623-L5L6 | | |
| | Q1008 | 8-729-120-28 | TRANSISTOR | 2SC1623-L5L6 | | |
| | Q1009 | 8-729-120-28 | TRANSISTOR | 2SC1623-L5L6 | | |
| | Q1010 | 8-729-120-28 | TRANSISTOR | 2SC1623-L5L6 | | |
| | Q1021 | 8-729-027-23 | TRANSISTOR | DTA114EKA-T146 | | |
| | Q1022 | 8-729-027-23 | TRANSISTOR | DTA114EKA-T146 | | |
| | Q1023 | 8-729-027-23 | TRANSISTOR | DTA114EKA-T146 | | |
| | Q1024 | 8-729-027-23 | TRANSISTOR | DTA114EKA-T146 | | |
| | | | < RESISTOR > | | | |
| | R1001 | 1-216-025-11 | RES-CHIP | 100 | 5% | 1/10W |
| | R1002 | 1-216-025-11 | RES-CHIP | 100 | 5% | 1/10W |
| | R1003 | 1-216-025-11 | RES-CHIP | 100 | 5% | 1/10W |
| | R1004 | 1-216-025-11 | RES-CHIP | 100 | 5% | 1/10W |
| | R1005 | 1-216-025-11 | RES-CHIP | 100 | 5% | 1/10W |
| | R1006 | 1-216-025-11 | RES-CHIP | 100 | 5% | 1/10W |
| | R1007 | 1-216-025-11 | RES-CHIP | 100 | 5% | 1/10W |
| | R1008 | 1-216-025-11 | RES-CHIP | 100 | 5% | 1/10W |
| | R1009 | 1-216-025-11 | RES-CHIP | 100 | 5% | 1/10W |
| | R1010 | 1-216-025-11 | RES-CHIP | 100 | 5% | 1/10W |
| | R1011 | 1-216-089-11 | RES-CHIP | 47K | 5% | 1/10W |
| | R1012 | 1-216-089-11 | RES-CHIP | 47K | 5% | 1/10W |
| | R1013 | 1-216-089-11 | RES-CHIP | 47K | 5% | 1/10W |
| | R1014 | 1-216-089-11 | RES-CHIP | 47K | 5% | 1/10W |
| | R1015 | 1-216-089-11 | RES-CHIP | 47K | 5% | 1/10W |
| | R1016 | 1-216-089-11 | RES-CHIP | 47K | 5% | 1/10W |
| | R1017 | 1-216-089-11 | RES-CHIP | 47K | 5% | 1/10W |

| Ref. No. | Part No. | Description | | | Remark |
|---|---|---|---|---|---|
| R1018 | 1-216-089-11 | RES-CHIP | 47K | 5% | 1/10W |
| R1019 | 1-216-089-11 | RES-CHIP | 47K | 5% | 1/10W |
| R1020 | 1-216-089-11 | RES-CHIP | 47K | 5% | 1/10W |
| R1034 | 1-216-061-00 | METAL CHIP | 3.3K | 5% | 1/10W |
| R1042 | 1-216-025-11 | RES-CHIP | 100 | 5% | 1/10W |
| R1043 | 1-216-025-11 | RES-CHIP | 100 | 5% | 1/10W |
| R1044 | 1-216-025-11 | RES-CHIP | 100 | 5% | 1/10W |
| R1045 | 1-216-025-11 | RES-CHIP | 100 | 5% | 1/10W |
| R1046 | 1-216-025-11 | RES-CHIP | 100 | 5% | 1/10W |
| R1047 | 1-216-069-00 | METAL CHIP | 6.8K | 5% | 1/10W |
| R1048 | 1-216-069-00 | METAL CHIP | 6.8K | 5% | 1/10W |
| R1049 | 1-216-073-00 | METAL CHIP | 10K | 5% | 1/10W |
| R1050 | 1-216-073-00 | METAL CHIP | 10K | 5% | 1/10W |
| R1051 | 1-216-045-00 | METAL CHIP | 680 | 5% | 1/10W |
| R1052 | 1-216-049-11 | RES-CHIP | 1K | 5% | 1/10W |
| R1053 | 1-216-053-00 | METAL CHIP | 1.5K | 5% | 1/10W |
| R1054 | 1-216-061-00 | METAL CHIP | 3.3K | 5% | 1/10W |
| R1061 | 1-216-025-11 | RES-CHIP | 100 | 5% | 1/10W |
| R1062 | 1-216-025-11 | RES-CHIP | 100 | 5% | 1/10W |
| R1068 | 1-216-073-00 | METAL CHIP | 10K | 5% | 1/10W |
| R1071 | 1-216-073-00 | METAL CHIP | 10K | 5% | 1/10W |
| R1072 | 1-216-073-00 | METAL CHIP | 10K | 5% | 1/10W |
| R1073 | 1-216-073-00 | METAL CHIP | 10K | 5% | 1/10W |
| R1074 | 1-216-073-00 | METAL CHIP | 10K | 5% | 1/10W |
| R1075 | 1-216-073-00 | METAL CHIP | 10K | 5% | 1/10W |
| R1076 | 1-216-073-00 | METAL CHIP | 10K | 5% | 1/10W |
| R1077 | 1-216-073-00 | METAL CHIP | 10K | 5% | 1/10W |
| R1078 | 1-216-073-00 | METAL CHIP | 10K | 5% | 1/10W |
| R1080 | 1-216-073-00 | METAL CHIP | 10K | 5% | 1/10W |
| R1081 | 1-216-073-00 | METAL CHIP | 10K | 5% | 1/10W |
| R1082 | 1-216-073-00 | METAL CHIP | 10K | 5% | 1/10W |
| R1090 | 1-216-073-00 | METAL CHIP | 10K | 5% | 1/10W |
| R1091 | 1-216-073-00 | METAL CHIP | 10K | 5% | 1/10W |
| R1092 | 1-216-073-00 | METAL CHIP | 10K | 5% | 1/10W |
| | | < SWITCH > | | | |
| S1001 | 1-554-303-21 | SWITCH, TACTILE (⏏ OPEN/CLOSE) | | | |
| S1002 | 1-554-303-21 | SWITCH, TACTILE (■) | | | |
| S1003 | 1-554-303-21 | SWITCH, TACTILE (►) | | | |
| S1004 | 1-554-303-21 | SWITCH, TACTILE (❚❚) | | | |
| | | < VIBRATOR > | | | |
| X1001 | 1-579-125-11 | VIBRATOR, CERAMIC (8MHz) | | | |

*************************************************************

HEADPHONE BOARD
*****************

| Ref. No. | Part No. | Description | | | Remark |
|---|---|---|---|---|---|
| | | < CAPACITOR > | | | |
| C171 | 1-162-302-11 | CERAMIC | 0.0022uF | 30% | 16V |
| C271 | 1-162-302-11 | CERAMIC | 0.0022uF | 30% | 16V |
| C350 | 1-107-725-11 | CERAMIC CHIP | 0.1uF | 10% | 16V |
| | | < CONNECTOR > | | | |
| CN371 | 1-564-507-11 | PLUG, CONNECTOR 4P | | | |
| CN372 | 1-564-521-11 | PLUG, CONNECTOR 6P | | | |
| | | < JACK > | | | |
| J371 | 1-770-307-11 | JACK (LARGE TYPE) (PHONES) | | | |
| | | < COIL > | | | |
| L171 | 1-414-512-21 | INDUCTOR CHIP | 6.8uH | | |
| L271 | 1-414-512-21 | INDUCTOR CHIP | 6.8uH | | |
| L371 | 1-414-512-21 | INDUCTOR CHIP | 6.8uH | | |
| | | < VARIABLE RESISTOR > | | | |
| RV371 | 1-227-227-11 | RES, VAR 10K/10K (PHONE LEVEL) | | | |

*************************************************************

JOG BOARD
**********

| Ref. No. | Part No. | Description | | | Remark |
|---|---|---|---|---|---|
| | | < ROTARY ENCODER > | | | |
| RY1001 | 1-475-006-11 | ENCODER, ROTARY (I◁◁AMS▷▷I, PUSH ENTER) | | | |

*************************************************************

KEY BOARD
**********

| Ref. No. | Part No. | Description | | | Remark |
|---|---|---|---|---|---|
| | | < CONNECTOR > | | | |
| CN1004 | 1-793-674-21 | CONNECTOR, BOARD TO BOARD 7P | | | |
| | | < RESISTOR > | | | |
| R1055 | 1-216-045-00 | METAL CHIP | 680 | 5% | 1/10W |
| R1056 | 1-216-049-11 | RES-CHIP | 1K | 5% | 1/10W |
| R1057 | 1-216-053-00 | METAL CHIP | 1.5K | 5% | 1/10W |
| R1063 | 1-216-029-00 | METAL CHIP | 150 | 5% | 1/10W |
| R1064 | 1-216-029-00 | METAL CHIP | 150 | 5% | 1/10W |
| | | < SWITCH > | | | |
| S1005 | 1-570-101-51 | SWITCH, KEY BOARD (SACD/CD) | | | |
| S1006 | 1-554-303-21 | SWITCH, TACTILE (TIME/TEXT) | | | |
| S1007 | 1-570-101-51 | SWITCH, KEY BOARD (DIGITAL OUT) | | | |
| S1008 | 1-554-303-21 | SWITCH, TACTILE (FILTER) | | | |

*************************************************************

LINE OUT BOARD
**************

| Ref. No. | Part No. | Description | | | Remark |
|---|---|---|---|---|---|
| | | < CAPACITOR > | | | |
| C381 | 1-164-159-11 | CERAMIC | 0.1uF | | 50V |
| | | < CONNECTOR > | | | |
| CN381 | 1-564-507-11 | PLUG, CONNECTOR 4P | | | |
| CN382 | 1-568-951-11 | PIN, CONNECTOR 2P | | | |
| CN383 | 1-568-951-21 | PIN, CONNECTOR 2P | | | |
| | | < DIODE > | | | |
| D381 | 8-719-911-19 | DIODE 1SS119-25 | | | |
| | | < JACK > | | | |
| J381 | 1-794-705-11 | JACK, PIN 2P (ANALOG OUT) | | | |

| Ref. No. | Part No. | Description | | | Remark |
|---|---|---|---|---|---|
| | | < RESISTOR > | | | |
| R181 | 1-259-526-91 | CARBON | 62 | 1% | 1/2W |
| R281 | 1-259-526-91 | CARBON | 62 | 1% | 1/2W |
| | | < RELAY > | | | |
| RY381 | 1-755-295-11 | RELAY | | | |

*************************************************************

| Ref. No. | Part No. | Description | | | Remark |
|---|---|---|---|---|---|
| * | 1-641-765-11 | LOADING MOTOR BOARD | | | |
| | | ********************* | | | |

*************************************************************

| Ref. No. | Part No. | Description | | | Remark |
|---|---|---|---|---|---|
| | A-4725-362-A | MAIN BOARD, COMPLETE | | | |
| | | ********************* | | | |
| | | < CAPACITOR/RESISTOR > | | | |
| C506 | 1-107-826-11 | CERAMIC CHIP | 0.1uF | 10% | 16V |
| C509 | 1-107-826-11 | CERAMIC CHIP | 0.1uF | 10% | 16V |
| C510 | 1-107-826-11 | CERAMIC CHIP | 0.1uF | 10% | 16V |
| C511 | 1-107-826-11 | CERAMIC CHIP | 0.1uF | 10% | 16V |
| C513 | 1-107-826-11 | CERAMIC CHIP | 0.1uF | 10% | 16V |
| C516 | 1-164-676-11 | CERAMIC CHIP | 2200PF | 5% | 16V |
| C517 | 1-125-822-11 | TANTALUM CHIP | 10uF | 20% | 10V |
| C518 | 1-107-826-11 | CERAMIC CHIP | 0.1uF | 10% | 16V |
| C519 | 1-107-826-11 | CERAMIC CHIP | 0.1uF | 10% | 16V |
| C520 | 1-126-395-11 | ELECT CHIP | 22uF | 20% | 16V |
| C521 | 1-162-965-11 | CERAMIC CHIP | 0.0015uF | 10% | 50V |
| C523 | 1-162-965-11 | CERAMIC CHIP | 0.0015uF | 10% | 50V |
| C525 | 1-107-826-11 | CERAMIC CHIP | 0.1uF | 10% | 16V |
| C526 | 1-107-826-11 | CERAMIC CHIP | 0.1uF | 10% | 16V |
| C527 | 1-164-739-11 | CERAMIC CHIP | 560PF | 5% | 50V |
| C528 | 1-125-822-11 | TANTALUM CHIP | 10uF | 20% | 10V |
| C529 | 1-164-739-11 | CERAMIC CHIP | 560PF | 5% | 50V |
| C530 | 1-107-826-11 | CERAMIC CHIP | 0.1uF | 10% | 16V |
| C531 | 1-165-176-11 | CERAMIC CHIP | 0.047uF | 10% | 16V |
| C532 | 1-107-826-11 | CERAMIC CHIP | 0.1uF | 10% | 16V |
| C533 | 1-162-966-11 | CERAMIC CHIP | 0.0022uF | 10% | 50V |
| C534 | 1-162-970-11 | CERAMIC CHIP | 0.01uF | 10% | 25V |
| C535 | 1-162-966-11 | CERAMIC CHIP | 0.0022uF | 10% | 50V |
| C536 | 1-125-891-11 | CERAMIC CHIP | 0.47uF | 10% | 10V |
| C537 | 1-216-864-11 | METAL CHIP | 0 | 5% | 1/16W |
| C539 | 1-107-826-11 | CERAMIC CHIP | 0.1uF | 10% | 16V |
| C541 | 1-107-826-11 | CERAMIC CHIP | 0.1uF | 10% | 16V |
| C542 | 1-125-891-11 | CERAMIC CHIP | 0.47uF | 10% | 10V |
| C543 | 1-107-826-11 | CERAMIC CHIP | 0.1uF | 10% | 16V |
| C544 | 1-107-826-11 | CERAMIC CHIP | 0.1uF | 10% | 16V |
| C545 | 1-125-822-11 | TANTALUM CHIP | 10uF | 20% | 10V |
| C547 | 1-107-826-11 | CERAMIC CHIP | 0.1uF | 10% | 16V |
| C548 | 1-162-970-11 | CERAMIC CHIP | 0.01uF | 10% | 25V |
| C549 | 1-107-826-11 | CERAMIC CHIP | 0.1uF | 10% | 16V |
| C550 | 1-162-963-11 | CERAMIC CHIP | 680PF | 10% | 50V |
| C551 | 1-125-891-11 | CERAMIC CHIP | 0.47uF | 10% | 10V |
| C553 | 1-162-970-11 | CERAMIC CHIP | 0.01uF | 10% | 25V |
| C554 | 1-107-826-11 | CERAMIC CHIP | 0.1uF | 10% | 16V |
| C555 | 1-162-963-11 | CERAMIC CHIP | 680PF | 10% | 50V |
| C556 | 1-125-822-11 | TANTALUM CHIP | 10uF | 20% | 10V |
| C558 | 1-162-963-11 | CERAMIC CHIP | 680PF | 10% | 50V |

| Ref. No. | Part No. | Description | | | Remark |
|---|---|---|---|---|---|
| C559 | 1-107-826-11 | CERAMIC CHIP | 0.1uF | 10% | 16V |
| C560 | 1-162-965-11 | CERAMIC CHIP | 0.0015uF | 10% | 50V |
| C561 | 1-107-826-11 | CERAMIC CHIP | 0.1uF | 10% | 16V |
| C562 | 1-162-963-11 | CERAMIC CHIP | 680PF | 10% | 50V |
| C563 | 1-162-927-11 | CERAMIC CHIP | 100PF | 5% | 50V |
| C565 | 1-107-826-11 | CERAMIC CHIP | 0.1uF | 10% | 16V |
| C567 | 1-107-826-11 | CERAMIC CHIP | 0.1uF | 10% | 16V |
| C568 | 1-125-822-11 | TANTALUM | 10uF | 20% | 10V |
| C569 | 1-107-826-11 | CERAMIC CHIP | 0.1uF | 10% | 16V |
| C570 | 1-125-822-11 | TANTALUM | 10uF | 20% | 10V |
| C572 | 1-115-156-11 | CERAMIC CHIP | 1uF | | 10V |
| C573 | 1-162-927-11 | CERAMIC CHIP | 100PF | 5% | 50V |
| C577 | 1-162-970-11 | CERAMIC CHIP | 0.01uF | 10% | 25V |
| C579 | 1-107-826-11 | CERAMIC CHIP | 0.1uF | 10% | 16V |
| C582 | 1-107-826-11 | CERAMIC CHIP | 0.1uF | 10% | 16V |
| C583 | 1-107-826-11 | CERAMIC CHIP | 0.1uF | 10% | 16V |
| C584 | 1-126-395-11 | ELECT | 22uF | 20% | 16V |
| C587 | 1-107-826-11 | CERAMIC CHIP | 0.1uF | 10% | 16V |
| C588 | 1-162-966-11 | CERAMIC CHIP | 0.0022uF | 10% | 50V |
| C589 | 1-162-966-11 | CERAMIC CHIP | 0.0022uF | 10% | 50V |
| C590 | 1-162-964-11 | CERAMIC CHIP | 0.001uF | 10% | 50V |
| C591 | 1-125-822-11 | TANTALUM | 10uF | 20% | 10V |
| C592 | 1-125-822-11 | TANTALUM | 10uF | 20% | 10V |
| C701 | 1-125-822-11 | TANTALUM | 10uF | 20% | 10V |
| C702 | 1-125-822-11 | TANTALUM | 10uF | 20% | 10V |
| C703 | 1-162-970-11 | CERAMIC CHIP | 0.01uF | 10% | 25V |
| C704 | 1-115-156-11 | CERAMIC CHIP | 1uF | | 10V |
| C705 | 1-164-156-11 | CERAMIC CHIP | 0.1uF | | 25V |
| C706 | 1-164-156-11 | CERAMIC CHIP | 0.1uF | | 25V |
| C707 | 1-162-921-11 | CERAMIC CHIP | 33PF | 5% | 50V |
| C708 | 1-162-964-11 | CERAMIC CHIP | 0.001uF | 10% | 50V |
| C709 | 1-164-156-11 | CERAMIC CHIP | 0.1uF | | 25V |
| C711 | 1-162-970-11 | CERAMIC CHIP | 0.01uF | 10% | 25V |
| C712 | 1-164-230-11 | CERAMIC CHIP | 220PF | 5% | 50V |
| C713 | 1-164-156-11 | CERAMIC CHIP | 0.1uF | | 25V |
| C714 | 1-164-156-11 | CERAMIC CHIP | 0.1uF | | 25V |
| C715 | 1-162-964-11 | CERAMIC CHIP | 0.001uF | 10% | 50V |
| C716 | 1-125-891-11 | CERAMIC CHIP | 0.47uF | 10% | 10V |
| C717 | 1-162-970-11 | CERAMIC CHIP | 0.01uF | 10% | 25V |
| C718 | 1-164-156-11 | CERAMIC CHIP | 0.1uF | | 25V |
| C720 | 1-107-826-11 | CERAMIC CHIP | 0.1uF | 10% | 16V |
| C721 | 1-107-826-11 | CERAMIC CHIP | 0.1uF | 10% | 16V |
| C722 | 1-164-156-11 | CERAMIC CHIP | 0.1uF | | 25V |
| C723 | 1-164-156-11 | CERAMIC CHIP | 0.1uF | | 25V |
| C724 | 1-164-156-11 | CERAMIC CHIP | 0.1uF | | 25V |
| C725 | 1-164-156-11 | CERAMIC CHIP | 0.1uF | | 25V |
| C726 | 1-164-156-11 | CERAMIC CHIP | 0.1uF | | 25V |
| C727 | 1-125-822-11 | TANTALUM | 10uF | 20% | 10V |
| C728 | 1-107-826-11 | CERAMIC CHIP | 0.1uF | 10% | 16V |
| C729 | 1-125-822-11 | TANTALUM | 10uF | 20% | 10V |
| C730 | 1-164-156-11 | CERAMIC CHIP | 0.1uF | | 25V |
| C731 | 1-107-826-11 | CERAMIC CHIP | 0.1uF | 10% | 16V |
| C732 | 1-164-156-11 | CERAMIC CHIP | 0.1uF | | 25V |
| C740 | 1-164-156-11 | CERAMIC CHIP | 0.1uF | | 25V |
| C741 | 1-164-156-11 | CERAMIC CHIP | 0.1uF | | 25V |
| C742 | 1-164-156-11 | CERAMIC CHIP | 0.1uF | | 25V |
| C743 | 1-164-156-11 | CERAMIC CHIP | 0.1uF | | 25V |
| C744 | 1-164-156-11 | CERAMIC CHIP | 0.1uF | | 25V |

| Ref. No. | Part No. | Description | | | Remark |
|---|---|---|---|---|---|
| C745 | 1-164-156-11 | CERAMIC CHIP | 0.1uF | | 25V |
| C746 | 1-162-966-11 | CERAMIC CHIP | 0.0022uF | 10% | 50V |
| C747 | 1-164-156-11 | CERAMIC CHIP | 0.1uF | | 25V |
| C752 | 1-164-156-11 | CERAMIC CHIP | 0.1uF | | 25V |
| C760 | 1-164-156-11 | CERAMIC CHIP | 0.1uF | | 25V |
| C761 | 1-164-156-11 | CERAMIC CHIP | 0.1uF | | 25V |
| C762 | 1-164-156-11 | CERAMIC CHIP | 0.1uF | | 25V |
| C763 | 1-164-156-11 | CERAMIC CHIP | 0.1uF | | 25V |
| C764 | 1-164-156-11 | CERAMIC CHIP | 0.1uF | | 25V |
| C765 | 1-164-156-11 | CERAMIC CHIP | 0.1uF | | 25V |
| C766 | 1-162-927-11 | CERAMIC CHIP | 100PF | 5% | 50V |
| C767 | 1-164-156-11 | CERAMIC CHIP | 0.1uF | | 25V |
| C768 | 1-164-156-11 | CERAMIC CHIP | 0.1uF | | 25V |
| C769 | 1-164-156-11 | CERAMIC CHIP | 0.1uF | | 25V |
| C770 | 1-164-156-11 | CERAMIC CHIP | 0.1uF | | 25V |
| C771 | 1-165-176-11 | CERAMIC CHIP | 0.047uF | 10% | 16V |
| C772 | 1-164-156-11 | CERAMIC CHIP | 0.1uF | | 25V |
| C773 | 1-125-891-11 | CERAMIC CHIP | 0.47uF | 10% | 10V |
| C774 | 1-162-968-11 | CERAMIC CHIP | 0.0047uF | 10% | 50V |
| C775 | 1-164-156-11 | CERAMIC CHIP | 0.1uF | | 25V |
| C776 | 1-164-156-11 | CERAMIC CHIP | 0.1uF | | 25V |
| C777 | 1-164-156-11 | CERAMIC CHIP | 0.1uF | | 25V |
| C778 | 1-164-156-11 | CERAMIC CHIP | 0.1uF | | 25V |
| C779 | 1-125-822-11 | TANTALUM CHIP | 10uF | 20% | 10V |
| C780 | 1-125-822-11 | TANTALUM CHIP | 10uF | 20% | 10V |
| C781 | 1-125-822-11 | TANTALUM CHIP | 10uF | 20% | 10V |
| C790 | 1-126-204-11 | ELECT CHIP | 47uF | 20% | 16V |
| C791 | 1-126-206-11 | ELECT CHIP | 100uF | 20% | 6.3V |
| C792 | 1-126-206-11 | ELECT CHIP | 100uF | 20% | 6.3V |
| C793 | 1-126-246-11 | ELECT CHIP | 220uF | 20% | 4V |
| C794 | 1-126-246-11 | ELECT CHIP | 220uF | 20% | 4V |
| C801 | 1-162-970-11 | CERAMIC CHIP | 0.01uF | 10% | 25V |
| C802 | 1-125-822-11 | TANTALUM CHIP | 10uF | 20% | 10V |
| C803 | 1-162-970-11 | CERAMIC CHIP | 0.01uF | 10% | 25V |
| C804 | 1-162-970-11 | CERAMIC CHIP | 0.01uF | 10% | 25V |
| C805 | 1-162-970-11 | CERAMIC CHIP | 0.01uF | 10% | 25V |
| C806 | 1-125-822-11 | TANTALUM CHIP | 10uF | 20% | 10V |
| C807 | 1-162-970-11 | CERAMIC CHIP | 0.01uF | 10% | 25V |
| C808 | 1-162-927-11 | CERAMIC CHIP | 100PF | 5% | 50V |
| C809 | 1-162-970-11 | CERAMIC CHIP | 0.01uF | 10% | 25V |
| C810 | 1-162-970-11 | CERAMIC CHIP | 0.01uF | 10% | 25V |
| C811 | 1-162-970-11 | CERAMIC CHIP | 0.01uF | 10% | 25V |
| C812 | 1-162-970-11 | CERAMIC CHIP | 0.01uF | 10% | 25V |
| C813 | 1-162-970-11 | CERAMIC CHIP | 0.01uF | 10% | 25V |
| C814 | 1-125-822-11 | TANTALUM CHIP | 10uF | 20% | 10V |
| C815 | 1-162-970-11 | CERAMIC CHIP | 0.01uF | 10% | 25V |
| C823 | 1-125-822-11 | TANTALUM CHIP | 10uF | 20% | 10V |
| C824 | 1-164-677-11 | CERAMIC CHIP | 0.033uF | 10% | 16V |
| C825 | 1-162-970-11 | CERAMIC CHIP | 0.01uF | 10% | 25V |
| C826 | 1-125-822-11 | TANTALUM CHIP | 10uF | 20% | 10V |
| C827 | 1-162-970-11 | CERAMIC CHIP | 0.01uF | 10% | 25V |
| C828 | 1-162-970-11 | CERAMIC CHIP | 0.01uF | 10% | 25V |
| C829 | 1-125-822-11 | TANTALUM CHIP | 10uF | 20% | 10V |
| C830 | 1-162-970-11 | CERAMIC CHIP | 0.01uF | 10% | 25V |
| C831 | 1-125-822-11 | TANTALUM CHIP | 10uF | 20% | 10V |
| C832 | 1-162-970-11 | CERAMIC CHIP | 0.01uF | 10% | 25V |
| C833 | 1-162-970-11 | CERAMIC CHIP | 0.01uF | 10% | 25V |
| C834 | 1-162-970-11 | CERAMIC CHIP | 0.01uF | 10% | 25V |
| C835 | 1-162-970-11 | CERAMIC CHIP | 0.01uF | 10% | 25V |
| C840 | 1-125-822-11 | TANTALUM CHIP | 10uF | 20% | 10V |
| C842 | 1-162-970-11 | CERAMIC CHIP | 0.01uF | 10% | 25V |
| C843 | 1-162-970-11 | CERAMIC CHIP | 0.01uF | 10% | 25V |
| C844 | 1-115-156-11 | CERAMIC CHIP | 1uF | | 10V |
| C845 | 1-125-822-11 | TANTALUM CHIP | 10uF | 20% | 10V |
| C846 | 1-128-994-21 | ELECT CHIP | 47uF | 20% | 10V |
| C847 | 1-107-826-11 | CERAMIC CHIP | 0.1uF | 10% | 16V |
| C850 | 1-162-945-11 | CERAMIC CHIP | 22PF | 5% | 50V |
| C851 | 1-162-945-11 | CERAMIC CHIP | 22PF | 5% | 50V |
| C852 | 1-162-945-11 | CERAMIC CHIP | 22PF | 5% | 50V |
| C901 | 1-125-822-11 | TANTALUM CHIP | 10uF | 20% | 10V |
| C902 | 1-162-970-11 | CERAMIC CHIP | 0.01uF | 10% | 25V |
| C903 | 1-125-822-11 | TANTALUM CHIP | 10uF | 20% | 10V |
| C904 | 1-162-970-11 | CERAMIC CHIP | 0.01uF | 10% | 25V |
| C905 | 1-162-970-11 | CERAMIC CHIP | 0.01uF | 10% | 25V |
| C906 | 1-162-970-11 | CERAMIC CHIP | 0.01uF | 10% | 25V |
| C907 | 1-162-970-11 | CERAMIC CHIP | 0.01uF | 10% | 25V |
| C908 | 1-162-970-11 | CERAMIC CHIP | 0.01uF | 10% | 25V |
| C909 | 1-162-927-11 | CERAMIC CHIP | 100PF | 5% | 50V |
| C910 | 1-162-970-11 | CERAMIC CHIP | 0.01uF | 10% | 25V |
| C911 | 1-125-822-11 | TANTALUM CHIP | 10uF | 20% | 10V |
| C913 | 1-162-970-11 | CERAMIC CHIP | 0.01uF | 10% | 25V |
| C914 | 1-125-822-11 | TANTALUM CHIP | 10uF | 20% | 10V |
| C915 | 1-162-970-11 | CERAMIC CHIP | 0.01uF | 10% | 25V |
| C916 | 1-162-970-11 | CERAMIC CHIP | 0.01uF | 10% | 25V |
| C917 | 1-162-970-11 | CERAMIC CHIP | 0.01uF | 10% | 25V |
| C918 | 1-162-970-11 | CERAMIC CHIP | 0.01uF | 10% | 25V |
| C920 | 1-162-970-11 | CERAMIC CHIP | 0.01uF | 10% | 25V |
| C921 | 1-162-970-11 | CERAMIC CHIP | 0.01uF | 10% | 25V |
| C923 | 1-115-156-11 | CERAMIC CHIP | 1uF | | 10V |
| C924 | 1-162-970-11 | CERAMIC CHIP | 0.01uF | 10% | 25V |
| C925 | 1-125-822-11 | TANTALUM CHIP | 10uF | 20% | 10V |
| C926 | 1-162-970-11 | CERAMIC CHIP | 0.01uF | 10% | 25V |
| C927 | 1-162-970-11 | CERAMIC CHIP | 0.01uF | 10% | 25V |
| C928 | 1-125-822-11 | TANTALUM CHIP | 10uF | 20% | 10V |
| C950 | 1-162-970-11 | CERAMIC CHIP | 0.01uF | 10% | 25V |
| C951 | 1-164-156-11 | CERAMIC CHIP | 0.1uF | | 25V |
| | | < CONNECTOR > | | | |
| CN503 | 1-784-883-21 | CONNECTOR, FFC (LIF (NON-ZIF)) 35P | | | |
| CN701 | 1-794-606-41 | PIN, CONNECTOR (PC BPARD 9P | | | |
| * CN801 | 1-750-005-11 | PIN, CONNECTOR (PC BOARD) 4P | | | |
| CN901 | 1-784-868-21 | CONNECTOR, FFC (LIF (NON-ZIF)) 16P | | | |
| CN902 | 1-784-861-21 | CONNECTOR, FFC (LIF (NON-ZIF)) 9P | | | |
| CN903 | 1-794-708-11 | PIN, CONNECTOR 7P | | | |
| CN904 | 1-774-653-41 | PIN, CONNECTOR (PC BOARD) 3P | | | |
| | | < DIODE > | | | |
| D903 | 8-719-049-09 | DIODE 1SS367-T3SONY | | | |
| D904 | 8-719-049-09 | DIODE 1SS367-T3SONY | | | |
| | | < FERRITE BEAD > | | | |
| FB701 | 1-469-835-21 | FERRITE | 0uH | | |
| FB702 | 1-469-835-21 | FERRITE | 0uH | | |
| FB703 | 1-500-283-11 | FERRITE | 0uH | | |
| FB704 | 1-500-283-11 | FERRITE | 0uH | | |

## MAIN

| Ref. No. | Part No. | Description | | Remark |
|---|---|---|---|---|
| FB705 | 1-469-835-21 | FERRITE | 0uH | |
| FB706 | 1-469-835-21 | FERRITE | 0uH | |
| FB707 | 1-500-283-11 | FERRITE | 0uH | |
| FB708 | 1-500-283-11 | FERRITE | 0uH | |
| FB709 | 1-500-283-11 | FERRITE | 0uH | |
| FB710 | 1-500-283-11 | FERRITE | 0uH | |
| FB751 | 1-500-283-11 | FERRITE | 0uH | |
| FB752 | 1-500-283-11 | FERRITE | 0uH | |
| FB753 | 1-500-283-11 | FERRITE | 0uH | |
| FB754 | 1-500-283-11 | FERRITE | 0uH | |
| FB755 | 1-500-283-11 | FERRITE | 0uH | |
| FB756 | 1-500-283-11 | FERRITE | 0uH | |
| FB757 | 1-500-283-11 | FERRITE | 0uH | |
| FB801 | 1-500-283-11 | FERRITE | 0uH | |
| FB802 | 1-500-283-11 | FERRITE | 0uH | |
| FB803 | 1-500-283-11 | FERRITE | 0uH | |
| FB804 | 1-500-283-11 | FERRITE | 0uH | |
| | | < FILTER > | | |
| FL501 | 1-234-177-21 | FILTER, CHIP EMI | | |
| FL502 | 1-234-177-21 | FILTER, CHIP EMI | | |
| FL701 | 1-234-177-21 | FILTER, CHIP EMI | | |
| FL702 | 1-234-177-21 | FILTER, CHIP EMI | | |
| FL703 | 1-234-177-21 | FILTER, CHIP EMI | | |
| FL704 | 1-234-177-21 | FILTER, CHIP EMI | | |
| FL705 | 1-234-177-21 | FILTER, CHIP EMI | | |
| FL706 | 1-234-177-21 | FILTER, CHIP EMI | | |
| FL750 | 1-233-893-21 | FILTER, CHIP EMI | | |
| FL751 | 1-234-177-21 | FILTER, CHIP EMI | | |
| FL752 | 1-234-177-21 | FILTER, CHIP EMI | | |
| FL753 | 1-234-177-21 | FILTER, CHIP EMI | | |
| FL754 | 1-234-177-21 | FILTER, CHIP EMI | | |
| FL804 | 1-234-177-21 | FILTER, CHIP EMI | | |
| FL805 | 1-234-177-21 | FILTER, CHIP EMI | | |
| FL806 | 1-234-177-21 | FILTER, CHIP EMI | | |
| FL807 | 1-234-177-21 | FILTER, CHIP EMI | | |
| FL808 | 1-234-177-21 | FILTER, CHIP EMI | | |
| FL809 | 1-234-177-21 | FILTER, CHIP EMI | | |
| FL814 | 1-234-177-21 | FILTER, CHIP EMI | | |
| FL901 | 1-234-177-21 | FILTER, CHIP EMI | | |
| FL902 | 1-234-177-21 | FILTER, CHIP EMI | | |
| FL904 | 1-234-177-21 | FILTER, CHIP EMI | | |
| FL906 | 1-234-177-21 | FILTER, CHIP EMI | | |
| FL908 | 1-234-177-21 | FILTER, CHIP EMI | | |
| | | < IC > | | |
| IC502 | 8-759-567-26 | IC BA5983FP-E2 | | |
| IC503 | 8-759-701-40 | IC NJM3404AM-T1 | | |
| IC504 | 8-759-473-95 | IC uPC2905T-E1 | | |
| IC509 | 8-752-397-42 | IC CXD3008Q | | |
| IC512 | 8-759-490-71 | IC BA5912AFP-YE2 | | |
| IC701 | 8-752-409-10 | IC CXD1882R | | |
| IC703 | 8-759-701-40 | IC NJM3404AM-T1 | | |
| IC704 | 8-759-082-60 | IC TC7S66FU | | |
| IC706 | 8-759-543-83 | IC KM416V1204CT-L6 | | |
| IC708 | 8-759-701-40 | IC NJM3404AM-T1 | | |
| IC801 | 8-752-400-60 | IC CXD2751Q | | |

| Ref. No. | Part No. | Description | | | | Remark |
|---|---|---|---|---|---|---|
| IC803 | 8-759-449-58 | IC LM7131BCM5X | | | | |
| IC804 | 8-752-356-45 | IC CXD2301Q | | | | |
| IC805 | 8-759-585-52 | IC SN74AHC1GU04DBVR | | | | |
| IC806 | 8-759-585-51 | IC SN74AHC1G32DBVR | | | | |
| IC807 | 8-759-585-52 | IC SN74AHC1GU04DBVR | | | | |
| IC808 | 8-759-676-10 | IC MSM51V17805B-60TS-K | | | | |
| IC809 | 8-759-549-23 | IC SN74LV74APWR | | | | |
| IC810 | 8-759-585-52 | IC SN74AHC1GU04DBVR | | | | |
| IC811 | 8-759-549-25 | IC SN74LVU04APWR | | | | |
| IC812 | 8-759-549-15 | IC SN74LV245APWR | | | | |
| IC813 | 8-759-549-15 | IC SN74LV245APWR | | | | |
| IC814 | 8-759-649-33 | IC SN74AHCT1G08DCKR | | | | |
| IC815 | 8-759-524-19 | IC TC74VHC164FT (EL) | | | | |
| IC901 | 8-752-906-71 | IC CXP973F064R-1 | | | | |
| IC902 | 8-752-392-03 | IC CXD1095BR | | | | |
| IC903 | 8-759-487-04 | IC S-24C02AFJA-TB-01 | | | | |
| IC904 | 8-759-685-33 | IC BU2500FV-E2 | | | | |
| IC905 | 8-759-636-64 | IC M51957BFP-600C | | | | |
| IC906 | 8-759-645-76 | IC TC74VHCT32AFT | | | | |
| IC910 | 8-759-082-60 | IC TC7S66FU | | | | |
| | | < COIL > | | | | |
| L801 | 1-410-369-11 | INDUCTOR CHIP | 1uH | | | |
| L802 | 1-410-369-11 | INDUCTOR CHIP | 1uH | | | |
| L803 | 1-410-369-11 | INDUCTOR CHIP | 1uH | | | |
| | | < RESISTOR > | | | | |
| R501 | 1-216-833-11 | METAL CHIP | 10K | 5% | 1/16W | |
| R502 | 1-216-833-11 | METAL CHIP | 10K | 5% | 1/16W | |
| R513 | 1-216-797-11 | METAL CHIP | 10 | 5% | 1/16W | |
| R515 | 1-216-864-11 | METAL CHIP | 0 | 5% | 1/16W | |
| R516 | 1-216-797-11 | METAL CHIP | 10 | 5% | 1/16W | |
| R518 | 1-216-797-11 | METAL CHIP | 10 | 5% | 1/16W | |
| R519 | 1-216-864-11 | METAL CHIP | 0 | 5% | 1/16W | |
| R520 | 1-216-864-11 | METAL CHIP | 0 | 5% | 1/16W | |
| R522 | 1-216-864-11 | METAL CHIP | 0 | 5% | 1/16W | |
| R523 | 1-216-797-11 | METAL CHIP | 10 | 5% | 1/16W | |
| R529 | 1-218-748-11 | METAL CHIP | 220K | 0.5% | 1/16W | |
| R530 | 1-218-748-11 | METAL CHIP | 220K | 0.5% | 1/16W | |
| R533 | 1-216-864-11 | METAL CHIP | 0 | 5% | 1/16W | |
| R534 | 1-218-704-11 | METAL CHIP | 3.3K | 0.5% | 1/16W | |
| R538 | 1-218-740-11 | METAL CHIP | 100K | 0.5% | 1/16W | |
| R540 | 1-216-833-11 | METAL CHIP | 10K | 5% | 1/16W | |
| R541 | 1-218-740-11 | METAL CHIP | 100K | 0.5% | 1/16W | |
| R544 | 1-218-740-11 | METAL CHIP | 100K | 0.5% | 1/16W | |
| R545 | 1-218-740-11 | METAL CHIP | 100K | 0.5% | 1/16W | |
| R549 | 1-216-864-11 | METAL CHIP | 0 | 5% | 1/16W | |
| R554 | 1-216-827-11 | METAL CHIP | 3.3K | 5% | 1/16W | |
| R555 | 1-218-704-11 | METAL CHIP | 3.3K | 0.5% | 1/16W | |
| R556 | 1-216-827-11 | METAL CHIP | 3.3K | 5% | 1/16W | |
| R558 | 1-216-841-11 | METAL CHIP | 47K | 5% | 1/16W | |
| R559 | 1-216-797-11 | METAL CHIP | 10 | 5% | 1/16W | |
| R560 | 1-216-821-11 | METAL CHIP | 1K | 5% | 1/16W | |
| R561 | 1-216-821-11 | METAL CHIP | 1K | 5% | 1/16W | |
| R562 | 1-216-821-11 | METAL CHIP | 1K | 5% | 1/16W | |
| R563 | 1-216-797-11 | METAL CHIP | 10 | 5% | 1/16W | |
| R569 | 1-216-864-11 | METAL CHIP | 0 | 5% | 1/16W | |

| Ref. No. | Part No. | Description | | | Remark |
|---|---|---|---|---|---|
| R572 | 1-216-797-11 | METAL CHIP | 10 | 5% | 1/16W |
| R573 | 1-216-797-11 | METAL CHIP | 10 | 5% | 1/16W |
| R576 | 1-216-864-11 | METAL CHIP | 0 | 5% | 1/16W |
| R577 | 1-216-864-11 | METAL CHIP | 0 | 5% | 1/16W |
| R578 | 1-216-864-11 | METAL CHIP | 0 | 5% | 1/16W |
| R581 | 1-216-833-11 | METAL CHIP | 10K | 5% | 1/16W |
| R582 | 1-216-833-11 | METAL CHIP | 10K | 5% | 1/16W |
| R583 | 1-216-864-11 | METAL CHIP | 0 | 5% | 1/16W |
| R584 | 1-218-728-11 | METAL CHIP | 33K | 0.5% | 1/16W |
| R585 | 1-216-864-11 | METAL CHIP | 0 | 5% | 1/16W |
| R586 | 1-216-864-11 | METAL CHIP | 0 | 5% | 1/16W |
| R587 | 1-216-864-11 | METAL CHIP | 0 | 5% | 1/16W |
| R588 | 1-218-716-11 | METAL CHIP | 10K | 0.5% | 1/16W |
| R589 | 1-218-728-11 | METAL CHIP | 33K | 0.5% | 1/16W |
| R590 | 1-218-716-11 | METAL CHIP | 10K | 0.5% | 1/16W |
| R591 | 1-218-702-11 | METAL CHIP | 2.7K | 0.5% | 1/16W |
| R592 | 1-218-708-11 | METAL CHIP | 4.7K | 0.5% | 1/16W |
| R593 | 1-218-740-11 | METAL CHIP | 100K | 0.5% | 1/16W |
| R594 | 1-218-728-11 | METAL CHIP | 33K | 0.5% | 1/16W |
| R595 | 1-218-708-11 | METAL CHIP | 4.7K | 0.5% | 1/16W |
| R596 | 1-216-864-11 | METAL CHIP | 0 | 5% | 1/16W |
| R597 | 1-218-716-11 | METAL CHIP | 10K | 0.5% | 1/16W |
| R599 | 1-218-702-11 | METAL CHIP | 2.7K | 0.5% | 1/16W |
| R600 | 1-216-864-11 | METAL CHIP | 0 | 5% | 1/16W |
| R601 | 1-218-724-11 | METAL CHIP | 22K | 0.5% | 1/16W |
| R602 | 1-218-708-11 | METAL CHIP | 4.7K | 0.5% | 1/16W |
| R603 | 1-218-704-11 | METAL CHIP | 3.3K | 0.5% | 1/16W |
| R604 | 1-218-692-11 | METAL CHIP | 1K | 0.5% | 1/16W |
| R605 | 1-216-864-11 | METAL CHIP | 0 | 5% | 1/16W |
| R606 | 1-216-841-11 | METAL CHIP | 47K | 5% | 1/16W |
| R607 | 1-218-708-11 | METAL CHIP | 4.7K | 0.5% | 1/16W |
| R608 | 1-218-716-11 | METAL CHIP | 10K | 0.5% | 1/16W |
| R609 | 1-216-864-11 | METAL CHIP | 0 | 5% | 1/16W |
| R610 | 1-216-864-11 | METAL CHIP | 0 | 5% | 1/16W |
| R611 | 1-218-724-11 | METAL CHIP | 22K | 0.5% | 1/16W |
| R612 | 1-216-864-11 | METAL CHIP | 0 | 5% | 1/16W |
| R613 | 1-216-857-11 | METAL CHIP | 1M | 5% | 1/16W |
| R614 | 1-216-864-11 | METAL CHIP | 0 | 5% | 1/16W |
| R615 | 1-216-864-11 | METAL CHIP | 0 | 5% | 1/16W |
| R617 | 1-216-857-11 | METAL CHIP | 1M | 5% | 1/16W |
| R618 | 1-218-911-11 | METAL CHIP | 470K | 0.5% | 1/16W |
| R619 | 1-216-864-11 | METAL CHIP | 0 | 5% | 1/16W |
| R622 | 1-216-864-11 | METAL CHIP | 0 | 5% | 1/16W |
| R623 | 1-216-864-11 | METAL CHIP | 0 | 5% | 1/16W |
| R625 | 1-216-815-11 | METAL CHIP | 330 | 5% | 1/16W |
| R626 | 1-216-864-11 | METAL CHIP | 0 | 5% | 1/16W |
| R627 | 1-216-864-11 | METAL CHIP | 0 | 5% | 1/16W |
| R628 | 1-216-864-11 | METAL CHIP | 0 | 5% | 1/16W |
| R629 | 1-216-864-11 | METAL CHIP | 0 | 5% | 1/16W |
| R632 | 1-216-833-11 | METAL CHIP | 10K | 5% | 1/16W |
| R634 | 1-216-831-11 | METAL CHIP | 6.8K | 5% | 1/16W |
| R642 | 1-216-839-11 | METAL CHIP | 33K | 5% | 1/16W |
| R644 | 1-216-797-11 | METAL CHIP | 10 | 5% | 1/16W |
| R645 | 1-216-797-11 | METAL CHIP | 10 | 5% | 1/16W |
| R654 | 1-216-833-11 | METAL CHIP | 10K | 5% | 1/16W |
| R655 | 1-216-821-11 | METAL CHIP | 1K | 5% | 1/16W |
| R656 | 1-216-821-11 | METAL CHIP | 1K | 5% | 1/16W |
| R657 | 1-218-700-11 | METAL CHIP | 2.2K | 0.5% | 1/16W |

| Ref. No. | Part No. | Description | | | Remark |
|---|---|---|---|---|---|
| R658 | 1-218-700-11 | METAL CHIP | 2.2K | 0.5% | 1/16W |
| R659 | 1-218-700-11 | METAL CHIP | 2.2K | 0.5% | 1/16W |
| R660 | 1-218-700-11 | METAL CHIP | 2.2K | 0.5% | 1/16W |
| R661 | 1-216-296-00 | SHORT | 0 | | |
| R670 | 1-216-833-11 | METAL CHIP | 10K | 5% | 1/16W |
| R671 | 1-216-833-11 | METAL CHIP | 10K | 5% | 1/16W |
| R672 | 1-216-833-11 | METAL CHIP | 10K | 5% | 1/16W |
| R701 | 1-218-740-11 | METAL CHIP | 100K | 0.5% | 1/16W |
| R702 | 1-218-740-11 | METAL CHIP | 100K | 0.5% | 1/16W |
| R703 | 1-218-740-11 | METAL CHIP | 100K | 0.5% | 1/16W |
| R704 | 1-218-740-11 | METAL CHIP | 100K | 0.5% | 1/16W |
| R705 | 1-218-740-11 | METAL CHIP | 100K | 0.5% | 1/16W |
| R706 | 1-218-740-11 | METAL CHIP | 100K | 0.5% | 1/16W |
| R707 | 1-218-668-11 | METAL CHIP | 100 | 0.5% | 1/16W |
| R708 | 1-216-857-11 | METAL CHIP | 1M | 5% | 1/16W |
| R709 | 1-218-736-11 | METAL CHIP | 68K | 0.5% | 1/16W |
| R710 | 1-218-716-11 | METAL CHIP | 10K | 0.5% | 1/16W |
| R711 | 1-218-700-11 | METAL CHIP | 2.2K | 0.5% | 1/16W |
| R712 | 1-218-716-11 | METAL CHIP | 10K | 0.5% | 1/16W |
| R713 | 1-218-716-11 | METAL CHIP | 10K | 0.5% | 1/16W |
| R714 | 1-218-716-11 | METAL CHIP | 10K | 0.5% | 1/16W |
| R716 | 1-218-668-11 | METAL CHIP | 100 | 0.5% | 1/16W |
| R717 | 1-218-740-11 | METAL CHIP | 100K | 0.5% | 1/16W |
| R718 | 1-218-716-11 | METAL CHIP | 10K | 0.5% | 1/16W |
| R719 | 1-218-692-11 | METAL CHIP | 1K | 0.5% | 1/16W |
| R720 | 1-216-821-11 | METAL CHIP | 1K | 5% | 1/16W |
| R721 | 1-218-728-11 | METAL CHIP | 33K | 0.5% | 1/16W |
| R724 | 1-218-692-11 | METAL CHIP | 1K | 0.5% | 1/16W |
| R725 | 1-218-716-11 | METAL CHIP | 10K | 0.5% | 1/16W |
| R726 | 1-218-740-11 | METAL CHIP | 100K | 0.5% | 1/16W |
| R727 | 1-218-704-11 | METAL CHIP | 3.3K | 0.5% | 1/16W |
| R728 | 1-218-716-11 | METAL CHIP | 10K | 0.5% | 1/16W |
| R729 | 1-216-864-11 | METAL CHIP | 0 | 5% | 1/16W |
| R730 | 1-216-801-11 | METAL CHIP | 22 | 5% | 1/16W |
| R731 | 1-216-801-11 | METAL CHIP | 22 | 5% | 1/16W |
| R732 | 1-216-833-11 | METAL CHIP | 10K | 5% | 1/16W |
| R733 | 1-216-833-11 | METAL CHIP | 10K | 5% | 1/16W |
| R734 | 1-216-833-11 | METAL CHIP | 10K | 5% | 1/16W |
| R735 | 1-216-833-11 | METAL CHIP | 10K | 5% | 1/16W |
| R736 | 1-216-833-11 | METAL CHIP | 10K | 5% | 1/16W |
| R737 | 1-216-833-11 | METAL CHIP | 10K | 5% | 1/16W |
| R738 | 1-216-833-11 | METAL CHIP | 10K | 5% | 1/16W |
| R739 | 1-216-864-11 | METAL CHIP | 0 | 5% | 1/16W |
| R740 | 1-216-833-11 | METAL CHIP | 10K | 5% | 1/16W |
| R741 | 1-216-801-11 | METAL CHIP | 22 | 5% | 1/16W |
| R742 | 1-216-801-11 | METAL CHIP | 22 | 5% | 1/16W |
| R743 | 1-216-801-11 | METAL CHIP | 22 | 5% | 1/16W |
| R744 | 1-216-801-11 | METAL CHIP | 22 | 5% | 1/16W |
| R745 | 1-216-841-11 | METAL CHIP | 47K | 5% | 1/16W |
| R746 | 1-216-841-11 | METAL CHIP | 47K | 5% | 1/16W |
| R750 | 1-216-833-11 | METAL CHIP | 10K | 5% | 1/16W |
| R752 | 1-216-864-11 | METAL CHIP | 0 | 5% | 1/16W |
| R753 | 1-216-864-11 | METAL CHIP | 0 | 5% | 1/16W |
| R754 | 1-216-864-11 | METAL CHIP | 0 | 5% | 1/16W |
| R755 | 1-216-864-11 | METAL CHIP | 0 | 5% | 1/16W |
| R756 | 1-216-864-11 | METAL CHIP | 0 | 5% | 1/16W |
| R757 | 1-216-864-11 | METAL CHIP | 0 | 5% | 1/16W |

MAIN

| Ref. No. | Part No. | Description | | | Remark |
|---|---|---|---|---|---|
| R758 | 1-216-864-11 | METAL CHIP | 0 | 5% | 1/16W |
| R759 | 1-216-864-11 | METAL CHIP | 0 | 5% | 1/16W |
| R761 | 1-218-700-11 | METAL CHIP | 2.2K | 0.5% | 1/16W |
| R762 | 1-218-724-11 | METAL CHIP | 22K | 0.5% | 1/16W |
| R763 | 1-218-714-11 | METAL CHIP | 8.2K | 0.5% | 1/16W |
| R764 | 1-216-857-11 | METAL CHIP | 1M | 5% | 1/16W |
| R765 | 1-218-728-11 | METAL CHIP | 33K | 0.5% | 1/16W |
| R766 | 1-216-864-11 | METAL CHIP | 0 | 5% | 1/16W |
| R767 | 1-218-728-11 | METAL CHIP | 33K | 0.5% | 1/16W |
| R768 | 1-216-809-11 | METAL CHIP | 100 | 5% | 1/16W |
| R769 | 1-218-700-11 | METAL CHIP | 2.2K | 0.5% | 1/16W |
| R770 | 1-216-864-11 | METAL CHIP | 0 | 5% | 1/16W |
| R771 | 1-216-801-11 | METAL CHIP | 22 | 5% | 1/16W |
| R772 | 1-216-801-11 | METAL CHIP | 22 | 5% | 1/16W |
| R773 | 1-216-833-11 | METAL CHIP | 10K | 5% | 1/16W |
| R776 | 1-216-864-11 | METAL CHIP | 0 | 5% | 1/16W |
| R777 | 1-216-864-11 | METAL CHIP | 0 | 5% | 1/16W |
| R778 | 1-218-740-11 | METAL CHIP | 100K | 0.5% | 1/16W |
| R780 | 1-216-864-11 | METAL CHIP | 0 | 5% | 1/16W |
| R781 | 1-216-864-11 | METAL CHIP | 0 | 5% | 1/16W |
| R786 | 1-216-864-11 | METAL CHIP | 0 | 5% | 1/16W |
| R803 | 1-216-803-11 | METAL CHIP | 33 | 5% | 1/16W |
| R804 | 1-218-724-11 | METAL CHIP | 22K | 0.5% | 1/16W |
| R805 | 1-218-716-11 | METAL CHIP | 10K | 0.5% | 1/16W |
| R806 | 1-216-864-11 | METAL CHIP | 0 | 5% | 1/16W |
| R808 | 1-216-801-11 | METAL CHIP | 22 | 5% | 1/16W |
| R809 | 1-216-801-11 | METAL CHIP | 22 | 5% | 1/16W |
| R810 | 1-216-801-11 | METAL CHIP | 22 | 5% | 1/16W |
| R811 | 1-216-801-11 | METAL CHIP | 22 | 5% | 1/16W |
| R812 | 1-216-801-11 | METAL CHIP | 22 | 5% | 1/16W |
| R813 | 1-216-801-11 | METAL CHIP | 22 | 5% | 1/16W |
| R814 | 1-216-801-11 | METAL CHIP | 22 | 5% | 1/16W |
| R815 | 1-216-801-11 | METAL CHIP | 22 | 5% | 1/16W |
| R816 | 1-216-809-11 | METAL CHIP | 100 | 5% | 1/16W |
| R817 | 1-216-809-11 | METAL CHIP | 100 | 5% | 1/16W |
| R819 | 1-216-809-11 | METAL CHIP | 100 | 5% | 1/16W |
| R820 | 1-218-712-11 | METAL CHIP | 6.8K | 0.5% | 1/16W |
| R821 | 1-216-801-11 | METAL CHIP | 22 | 5% | 1/16W |
| R822 | 1-216-801-11 | METAL CHIP | 22 | 5% | 1/16W |
| R823 | 1-216-801-11 | METAL CHIP | 22 | 5% | 1/16W |
| R824 | 1-216-864-11 | METAL CHIP | 0 | 5% | 1/16W |
| R825 | 1-216-805-11 | METAL CHIP | 47 | 5% | 1/16W |
| R826 | 1-216-805-11 | METAL CHIP | 47 | 5% | 1/16W |
| R827 | 1-216-809-11 | METAL CHIP | 100 | 5% | 1/16W |
| R828 | 1-216-829-11 | METAL CHIP | 4.7K | 5% | 1/16W |
| R829 | 1-216-809-11 | METAL CHIP | 100 | 5% | 1/16W |
| R830 | 1-216-801-11 | METAL CHIP | 22 | 5% | 1/16W |
| R831 | 1-216-845-11 | METAL CHIP | 100K | 5% | 1/16W |
| R832 | 1-216-829-11 | METAL CHIP | 4.7K | 5% | 1/16W |
| R833 | 1-216-809-11 | METAL CHIP | 100 | 5% | 1/16W |
| R834 | 1-216-809-11 | METAL CHIP | 100 | 5% | 1/16W |
| R847 | 1-216-801-11 | METAL CHIP | 22 | 5% | 1/16W |
| R853 | 1-216-813-11 | METAL CHIP | 220 | 5% | 1/16W |
| R854 | 1-216-813-11 | METAL CHIP | 220 | 5% | 1/16W |
| R855 | 1-216-813-11 | METAL CHIP | 220 | 5% | 1/16W |
| R858 | 1-216-819-11 | METAL CHIP | 680 | 5% | 1/16W |
| R859 | 1-216-819-11 | METAL CHIP | 680 | 5% | 1/16W |
| R860 | 1-216-813-11 | METAL CHIP | 220 | 5% | 1/16W |

| Ref. No. | Part No. | Description | | | Remark |
|---|---|---|---|---|---|
| R875 | 1-216-830-11 | METAL CHIP | 5.6K | 5% | 1/16W |
| R876 | 1-216-864-11 | METAL CHIP | 0 | 5% | 1/16W |
| R901 | 1-216-801-11 | METAL CHIP | 22 | 5% | 1/16W |
| R902 | 1-216-801-11 | METAL CHIP | 22 | 5% | 1/16W |
| R903 | 1-216-801-11 | METAL CHIP | 22 | 5% | 1/16W |
| R904 | 1-216-801-11 | METAL CHIP | 22 | 5% | 1/16W |
| R905 | 1-216-801-11 | METAL CHIP | 22 | 5% | 1/16W |
| R906 | 1-216-801-11 | METAL CHIP | 22 | 5% | 1/16W |
| R907 | 1-216-801-11 | METAL CHIP | 22 | 5% | 1/16W |
| R908 | 1-216-801-11 | METAL CHIP | 22 | 5% | 1/16W |
| R909 | 1-216-801-11 | METAL CHIP | 22 | 5% | 1/16W |
| R910 | 1-216-864-11 | METAL CHIP | 0 | 5% | 1/16W |
| R911 | 1-216-864-11 | METAL CHIP | 0 | 5% | 1/16W |
| R912 | 1-216-833-11 | METAL CHIP | 10K | 5% | 1/16W |
| R913 | 1-216-833-11 | METAL CHIP | 10K | 5% | 1/16W |
| R915 | 1-216-809-11 | METAL CHIP | 100 | 5% | 1/16W |
| R916 | 1-216-821-11 | METAL CHIP | 1K | 5% | 1/16W |
| R917 | 1-216-821-11 | METAL CHIP | 1K | 5% | 1/16W |
| R919 | 1-216-801-11 | METAL CHIP | 22 | 5% | 1/16W |
| R920 | 1-216-809-11 | METAL CHIP | 100 | 5% | 1/16W |
| R921 | 1-216-809-11 | METAL CHIP | 100 | 5% | 1/16W |
| R922 | 1-216-801-11 | METAL CHIP | 22 | 5% | 1/16W |
| R925 | 1-216-809-11 | METAL CHIP | 100 | 5% | 1/16W |
| R926 | 1-216-809-11 | METAL CHIP | 100 | 5% | 1/16W |
| R928 | 1-216-809-11 | METAL CHIP | 100 | 5% | 1/16W |
| R929 | 1-216-809-11 | METAL CHIP | 100 | 5% | 1/16W |
| R930 | 1-216-809-11 | METAL CHIP | 100 | 5% | 1/16W |
| R931 | 1-216-809-11 | METAL CHIP | 100 | 5% | 1/16W |
| R932 | 1-216-809-11 | METAL CHIP | 100 | 5% | 1/16W |
| R934 | 1-216-833-11 | METAL CHIP | 10K | 5% | 1/16W |
| R935 | 1-216-833-11 | METAL CHIP | 10K | 5% | 1/16W |
| R936 | 1-216-829-11 | METAL CHIP | 4.7K | 5% | 1/16W |
| R937 | 1-216-829-11 | METAL CHIP | 4.7K | 5% | 1/16W |
| R938 | 1-216-833-11 | METAL CHIP | 10K | 5% | 1/16W |
| R939 | 1-216-809-11 | METAL CHIP | 100 | 5% | 1/16W |
| R940 | 1-216-809-11 | METAL CHIP | 100 | 5% | 1/16W |
| R941 | 1-216-809-11 | METAL CHIP | 100 | 5% | 1/16W |
| R942 | 1-216-809-11 | METAL CHIP | 100 | 5% | 1/16W |
| R943 | 1-216-809-11 | METAL CHIP | 100 | 5% | 1/16W |
| R944 | 1-216-833-11 | METAL CHIP | 10K | 5% | 1/16W |
| R945 | 1-216-833-11 | METAL CHIP | 10K | 5% | 1/16W |
| R946 | 1-216-833-11 | METAL CHIP | 10K | 5% | 1/16W |
| R947 | 1-216-864-11 | METAL CHIP | 0 | 5% | 1/16W |
| R948 | 1-218-720-11 | METAL CHIP | 15K | 0.5% | 1/16W |
| R949 | 1-218-720-11 | METAL CHIP | 15K | 0.5% | 1/16W |
| R950 | 1-216-833-11 | METAL CHIP | 10K | 5% | 1/16W |
| R951 | 1-216-821-11 | METAL CHIP | 1K | 5% | 1/16W |
| R952 | 1-216-827-11 | METAL CHIP | 3.3K | 5% | 1/16W |
| R953 | 1-216-833-11 | METAL CHIP | 10K | 5% | 1/16W |
| R954 | 1-216-833-11 | METAL CHIP | 10K | 5% | 1/16W |
| R955 | 1-216-801-11 | METAL CHIP | 22 | 5% | 1/16W |
| R956 | 1-216-801-11 | METAL CHIP | 22 | 5% | 1/16W |
| R957 | 1-216-801-11 | METAL CHIP | 22 | 5% | 1/16W |
| R958 | 1-216-864-11 | METAL CHIP | 0 | 5% | 1/16W |
| R959 | 1-216-833-11 | METAL CHIP | 10K | 5% | 1/16W |
| R960 | 1-216-833-11 | METAL CHIP | 10K | 5% | 1/16W |
| R961 | 1-216-821-11 | METAL CHIP | 1K | 5% | 1/16W |

| Ref. No. | Part No. | Description | | | Remark |
|---|---|---|---|---|---|
| R962 | 1-216-833-11 | METAL CHIP | 10K | 5% | 1/16W |
| R964 | 1-218-704-11 | METAL CHIP | 3.3K | 0.5% | 1/16W |
| R969 | 1-216-833-11 | METAL CHIP | 10K | 5% | 1/16W |
| R970 | 1-216-833-11 | METAL CHIP | 10K | 5% | 1/16W |
| R971 | 1-216-809-11 | METAL CHIP | 100 | 5% | 1/16W |
| R973 | 1-216-864-11 | METAL CHIP | 0 | 5% | 1/16W |
| R975 | 1-216-833-11 | METAL CHIP | 10K | 5% | 1/16W |
| R976 | 1-216-833-11 | METAL CHIP | 10K | 5% | 1/16W |
| R978 | 1-216-833-11 | METAL CHIP | 10K | 5% | 1/16W |
| R979 | 1-216-833-11 | METAL CHIP | 10K | 5% | 1/16W |
| R980 | 1-216-833-11 | METAL CHIP | 10K | 5% | 1/16W |
| R981 | 1-216-833-11 | METAL CHIP | 10K | 5% | 1/16W |
| R982 | 1-216-864-11 | METAL CHIP | 0 | 5% | 1/16W |
| R983 | 1-216-864-11 | METAL CHIP | 0 | 5% | 1/16W |
| R985 | 1-218-712-11 | METAL CHIP | 6.8K | 0.5% | 1/16W |
| R988 | 1-216-864-11 | METAL CHIP | 0 | 5% | 1/16W |
| R991 | 1-216-864-11 | METAL CHIP | 0 | 5% | 1/16W |
| R992 | 1-216-864-11 | METAL CHIP | 0 | 5% | 1/16W |
| R994 | 1-216-789-11 | METAL CHIP | 2.2 | 5% | 1/16W |
| R995 | 1-218-712-11 | METAL CHIP | 6.8K | 0.5% | 1/16W |
| R998 | 1-216-864-11 | METAL CHIP | 0 | 5% | 1/16W |

< VIBRATOR >

| Ref. No. | Part No. | Description | Remark |
|---|---|---|---|
| X901 | 1-781-945-21 | VIBRATOR, CERAMIC (20MHz) | |

*************************************************************

POWER BOARD
*************

| Ref. No. | Part No. | Description |
|---|---|---|
| | 2-259-121-01 | SCREW, TR |
| * | 4-931-401-01 | HEAT SINK, V.OUT |
| * | 4-941-237-01 | HEAT SINK |

< CAPACITOR >

| Ref. No. | Part No. | Description | | | Remark |
|---|---|---|---|---|---|
| C401 | 1-135-696-11 | ELECT | 4700uF | | 16V |
| C403 | 1-135-696-11 | ELECT | 4700uF | | 16V |
| C404 | 1-136-850-11 | MYLAR | 0.1uF | 5% | 63V |
| C405 | 1-135-776-11 | ELECT | 100uF | | 35V |
| C406 | 1-136-850-11 | MYLAR | 0.1uF | 5% | 63V |
| C408 | 1-135-689-11 | ELECT | 6800uF | | 25V |
| C409 | 1-135-689-11 | ELECT | 6800uF | | 25V |
| C410 | 1-137-626-11 | ELECT | 6800uF | 20% | 35V |
| C411 | 1-137-626-11 | ELECT | 6800uF | 20% | 35V |
| C412 | 1-125-781-21 | ELECT | 220uF | 20% | 35V |
| C413 | 1-125-781-21 | ELECT | 220uF | 20% | 35V |
| C414 | 1-135-771-11 | ELECT | 100uF | | 63V |
| C415 | 1-128-652-21 | MYLAR | 1uF | | 63V |
| C416 | 1-135-746-11 | ELECT | 47uF | | 50V |
| C417 | 1-164-159-11 | CERAMIC | 0.1uF | | 50V |
| C418 | 1-128-652-21 | MYLAR | 1uF | | 63V |
| C419 | 1-128-652-21 | MYLAR | 1uF | | 63V |
| C420 | 1-135-689-11 | ELECT | 6800uF | | 25V |
| C421 | 1-135-695-11 | ELECT | 3300uF | | 16V |
| C424 | 1-135-689-11 | ELECT | 6800uF | | 25V |
| C426 | 1-135-836-11 | ELECT | 2200uF | | 16V |
| C428 | 1-135-836-11 | ELECT | 2200uF | | 16V |
| C431 | 1-135-689-11 | ELECT | 6800uF | | 25V |
| C433 | 1-135-836-11 | ELECT | 2200uF | | 16V |
| C435 | 1-135-836-11 | ELECT | 2200uF | | 16V |
| C436 | 1-136-850-11 | MYLAR | 0.1uF | 5% | 63V |
| C437 | 1-136-850-11 | MYLAR | 0.1uF | 5% | 63V |
| C441 | 1-136-850-11 | MYLAR | 0.1uF | 5% | 63V |
| C442 | 1-136-850-11 | MYLAR | 0.1uF | 5% | 63V |
| C443 | 1-136-850-11 | MYLAR | 0.1uF | 5% | 63V |
| C444 | 1-136-850-11 | MYLAR | 0.1uF | 5% | 63V |
| C445 | 1-136-850-11 | MYLAR | 0.1uF | 5% | 63V |
| C446 | 1-136-850-11 | MYLAR | 0.1uF | 5% | 63V |
| C447 | 1-136-850-11 | MYLAR | 0.1uF | 5% | 63V |
| C448 | 1-136-850-11 | MYLAR | 0.1uF | 5% | 63V |
| C451 | 1-136-850-11 | MYLAR | 0.1uF | 5% | 63V |
| C452 | 1-136-850-11 | MYLAR | 0.1uF | 5% | 63V |
| C453 | 1-136-850-11 | MYLAR | 0.1uF | 5% | 63V |
| C454 | 1-136-850-11 | MYLAR | 0.1uF | 5% | 63V |
| C455 | 1-136-850-11 | MYLAR | 0.1uF | 5% | 63V |
| C471 | 1-107-725-11 | CERAMIC CHIP | 0.1uF | 10% | 16V |
| C479 | 1-128-652-21 | MYLAR | 1uF | | 63V |
| C480 | 1-128-652-21 | MYLAR | 1uF | | 63V |

< CONNECTOR >

| Ref. No. | Part No. | Description | Remark |
|---|---|---|---|
| CN401 | 1-564-511-31 | PLUG, CONNECTOR 8P | |
| CN402 | 1-564-507-31 | PLUG, CONNECTOR 4P | |
| CN403 | 1-564-509-31 | PLUG, CONNECTOR 6P | |
| CN404 | 1-564-506-21 | PLUG, CONNECTOR 3P | |
| CN405 | 1-564-506-11 | PLUG, CONNECTOR 3P | |
| CN406 | 1-564-507-11 | PLUG, CONNECTOR 4P | |
| CN407 | 1-564-507-41 | PLUG, CONNECTOR 4P | |
| CN408 | 1-568-955-11 | PIN, CONNECTOR 6P | |
| CN409 | 1-568-936-21 | PIN, CONNECTOR 9P | |
| CN410 | 1-564-505-31 | PLUG, CONNECTOR 2P | |
| CN411 | 1-564-505-41 | PLUG, CONNECTOR 2P | |
| CN412 | 1-564-505-11 | PLUG, CONNECTOR 2P | |

< DIODE >

| Ref. No. | Part No. | Description | | Remark |
|---|---|---|---|---|
| D401 | 8-719-210-33 | DIODE | EC10DS2 | |
| D402 | 8-719-210-33 | DIODE | EC10DS2 | |
| D403 | 8-719-072-28 | DIODE | MTZJ-T-72-10B | |
| D404 | 8-719-210-39 | DIODE | EC10QS-04 | |
| D405 | 8-719-210-39 | DIODE | EC10QS-04 | |
| D406 | 8-719-210-39 | DIODE | EC10QS-04 | |
| D407 | 8-719-210-39 | DIODE | EC10QS-04 | |
| D409 | 8-719-210-39 | DIODE | EC10QS-04 | |
| D410 | 8-719-210-39 | DIODE | EC10QS-04 | |
| D411 | 8-719-210-39 | DIODE | EC10QS-04 | |
| D412 | 8-719-210-39 | DIODE | EC10QS-04 | |
| D413 | 8-719-210-39 | DIODE | EC10QS-04 | |
| D414 | 8-719-210-39 | DIODE | EC10QS-04 | |
| D415 | 8-719-210-39 | DIODE | EC10QS-04 | |
| D416 | 8-719-210-39 | DIODE | EC10QS-04 | |
| D417 | 8-719-210-33 | DIODE | EC10DS2 | |
| D418 | 8-719-210-33 | DIODE | EC10DS2 | |
| D419 | 8-719-210-33 | DIODE | EC10DS2 | |
| D420 | 8-719-210-33 | DIODE | EC10DS2 | |
| D421 | 8-719-983-99 | DIODE | MTZJ-T-72-39D | |
| D422 | 8-719-175-88 | DIODE | RD7.5F-B | |
| D423 | 8-719-210-33 | DIODE | EC10DS2 | |
| D424 | 8-719-210-33 | DIODE | EC10DS2 | |

| Ref. No. | Part No. | Description | | | Remark |
|---|---|---|---|---|---|
| D425 | 8-719-210-33 | DIODE EC10DS2 | | | |
| D426 | 8-719-210-33 | DIODE EC10DS2 | | | |
| | | | | | |
| D427 | 8-719-210-33 | DIODE EC10DS2 | | | |
| D428 | 8-719-210-33 | DIODE EC10DS2 | | | |
| D429 | 8-719-210-33 | DIODE EC10DS2 | | | |
| D430 | 8-719-210-33 | DIODE EC10DS2 | | | |
| D431 | 8-719-210-33 | DIODE EC10DS2 | | | |
| | | | | | |
| D432 | 8-719-210-33 | DIODE EC10DS2 | | | |
| D433 | 8-719-210-33 | DIODE EC10DS2 | | | |
| D434 | 8-719-210-33 | DIODE EC10DS2 | | | |
| D435 | 8-719-313-73 | DIODE SFPB-52 | | | |
| D436 | 8-719-313-73 | DIODE SFPB-52 | | | |
| | | < RESISTOR > | | | |
| ⚠FR401 | 1-212-893-00 | FUSIBLE | 330 | 5% | 1/4W F |
| ⚠FR402 | 1-212-873-11 | FUSIBLE | 47 | 5% | 1/4W F |
| | | < IC > | | | |
| IC401 | 8-759-593-62 | IC uPC24A05AHF | | | |
| IC402 | 8-759-231-59 | IC TA7815S | | | |
| IC403 | 8-759-245-87 | IC TA7915S | | | |
| IC404 | 8-759-394-35 | IC BA12T | | | |
| IC405 | 8-759-450-47 | IC BA05T | | | |
| | | | | | |
| IC406 | 8-759-450-47 | IC BA05T | | | |
| IC407 | 8-759-445-59 | IC BA033T | | | |
| IC408 | 8-759-445-59 | IC BA033T | | | |
| | | < COIL > | | | |
| L401 | 1-414-510-21 | INDUCTOR CHIP | 3.3uH | | |
| L402 | 1-414-510-21 | INDUCTOR CHIP | 3.3uH | | |
| L403 | 1-412-473-21 | INDUCTOR CHIP | 0uH | | |
| L404 | 1-412-473-21 | INDUCTOR CHIP | 0uH | | |
| L441 | 1-424-122-11 | FILTER, NOISE | | | |
| | | | | | |
| L442 | 1-424-122-11 | FILTER, NOISE | | | |
| L443 | 1-424-122-11 | FILTER, NOISE | | | |
| L444 | 1-424-122-11 | FILTER, NOISE | | | |
| L445 | 1-424-122-11 | FILTER, NOISE | | | |
| L446 | 1-424-122-11 | FILTER, NOISE | | | |
| | | | | | |
| L447 | 1-424-122-11 | FILTER, NOISE | | | |
| L448 | 1-424-122-11 | FILTER, NOISE | | | |
| | | < TRANSISTOR > | | | |
| Q401 | 8-729-041-38 | TRANSISTOR | 2SB1241TV2Q | | |
| | | < RESISTOR > | | | |
| R401 | 1-249-421-11 | CARBON | 2.2K | 5% | 1/4W |
| R403 | 1-247-887-00 | CARBON | 220K | 5% | 1/4W |
| R404 | 1-247-807-31 | CARBON | 100 | 5% | 1/4W |
| R405 | 1-247-807-31 | CARBON | 100 | 5% | 1/4W |
| R406 | 1-249-432-11 | CARBON | 18K | 5% | 1/4W |
| | | | | | |
| R491 | 1-216-298-00 | METAL CHIP | 2.2 | 5% | 1/10W |
| | | < THERMISTOR (POSITIVE) > | | | |
| THP401 | 1-801-578-11 | THERMISTOR, POSITIVE | | | |
| THP402 | 1-801-578-11 | THERMISTOR, POSITIVE | | | |
| THP403 | 1-801-578-11 | THERMISTOR, POSITIVE | | | |

*************************************************************

| Ref. No. | Part No. | Description | | | Remark |
|---|---|---|---|---|---|
| | | POWER SWITCH BOARD | | | |
| | | ******************** | | | |
| | | < CAPACITOR > | | | |
| ⚠C481 | 1-113-927-11 | CERAMIC | 10000PF | 20% | 250V |
| | | < CONNECTOR > | | | |
| * CN481 | 1-568-226-11 | PIN, CONNECTOR 2P | | | |
| | | < SWITCH > | | | |
| ⚠S481 | 1-572-267-51 | SWITCH, PUSH (AC POWER) (1 KEY) (POWER) | | | |

*************************************************************

| Ref. No. | Part No. | Description | | | Remark |
|---|---|---|---|---|---|
| | | R.CNTL BOARD | | | |
| | | ************* | | | |
| | | < CAPACITOR > | | | |
| C1022 | 1-107-725-11 | CERAMIC CHIP | 0.1uF | 10% | 16V |
| | | < CONNECTOR > | | | |
| * CN1006 | 1-568-941-11 | PIN, CONNECTOR 3P | | | |
| | | < IC > | | | |
| IC1003 | 8-749-923-80 | IC GP1U90XB (REMOTE CONTROL RECEIVER) | | | |
| | | < RESISTOR > | | | |
| R1035 | 1-216-025-11 | RES-CHIP | 100 | 5% | 1/10W |

*************************************************************

| Ref. No. | Part No. | Description | | | Remark |
|---|---|---|---|---|---|
| | A-4725-382-A | RF BOARD, COMPLETE | | | |
| | | ******************* | | | |
| | | < CAPACITOR > | | | |
| C001 | 1-164-676-11 | CERAMIC CHIP | 2200PF | 5% | 16V |
| C002 | 1-164-676-11 | CERAMIC CHIP | 2200PF | 5% | 16V |
| C003 | 1-107-826-11 | CERAMIC CHIP | 0.1uF | 10% | 16V |
| C004 | 1-107-826-11 | CERAMIC CHIP | 0.1uF | 10% | 16V |
| C005 | 1-128-993-21 | ELECT CHIP | 22uF | 20% | 10V |
| | | | | | |
| C006 | 1-107-826-11 | CERAMIC CHIP | 0.1uF | 10% | 16V |
| C007 | 1-124-779-00 | ELECT CHIP | 10uF | 20% | 16V |
| C008 | 1-162-966-11 | CERAMIC CHIP | 0.0022uF | 10% | 50V |
| C009 | 1-162-966-11 | CERAMIC CHIP | 0.0022uF | 10% | 50V |
| C010 | 1-162-966-11 | CERAMIC CHIP | 0.0022uF | 10% | 50V |
| | | | | | |
| C011 | 1-162-966-11 | CERAMIC CHIP | 0.0022uF | 10% | 50V |
| C012 | 1-164-172-11 | CERAMIC CHIP | 0.0056uF | 10% | 25V |
| C013 | 1-164-172-11 | CERAMIC CHIP | 0.0056uF | 10% | 25V |
| C014 | 1-124-779-00 | ELECT CHIP | 10uF | 20% | 16V |
| C015 | 1-124-779-00 | ELECT CHIP | 10uF | 20% | 16V |
| | | | | | |
| C016 | 1-164-218-11 | CERAMIC CHIP | 180PF | 0.25PF | 50V |
| C017 | 1-162-919-11 | CERAMIC CHIP | 22PF | 5% | 50V |
| C018 | 1-162-919-11 | CERAMIC CHIP | 22PF | 5% | 50V |
| C019 | 1-124-779-00 | ELECT CHIP | 10uF | 20% | 16V |
| C020 | 1-162-919-11 | CERAMIC CHIP | 22PF | 5% | 50V |
| | | | | | |
| C021 | 1-162-919-11 | CERAMIC CHIP | 22PF | 5% | 50V |

The components identified by mark ⚠ or dotted line with mark ⚠ are critical for safety.
Replace only with part number specified.

| Ref. No. | Part No. | Description | | | Remark |
|---|---|---|---|---|---|
| C022 | 1-115-416-11 | CERAMIC CHIP | 0.001uF | 5% | 25V |
| C023 | 1-126-206-11 | ELECT CHIP | 100uF | 20% | 6.3V |
| C024 | 1-162-970-11 | CERAMIC CHIP | 0.01uF | 10% | 25V |
| C025 | 1-107-826-11 | CERAMIC CHIP | 0.1uF | 10% | 16V |
| C026 | 1-162-970-11 | CERAMIC CHIP | 0.01uF | 10% | 25V |
| C027 | 1-107-826-11 | CERAMIC CHIP | 0.1uF | 10% | 16V |
| C028 | 1-128-993-21 | ELECT CHIP | 22uF | 20% | 10V |
| C029 | 1-124-779-00 | ELECT CHIP | 10uF | 20% | 16V |
| C030 | 1-128-993-21 | ELECT CHIP | 22uF | 20% | 10V |
| C031 | 1-107-826-11 | CERAMIC CHIP | 0.1uF | 10% | 25V |
| C032 | 1-107-826-11 | CERAMIC CHIP | 0.1uF | 10% | 25V |
| C033 | 1-128-993-21 | ELECT CHIP | 22uF | 20% | 10V |
| C034 | 1-124-779-00 | ELECT CHIP | 10uF | 20% | 16V |
| C036 | 1-107-826-11 | CERAMIC CHIP | 0.1uF | 10% | 16V |
| C037 | 1-115-416-11 | CERAMIC CHIP | 0.001uF | 5% | 25V |
| C038 | 1-126-206-11 | ELECT CHIP | 100uF | 20% | 6.3V |
| C039 | 1-107-826-11 | CERAMIC CHIP | 0.1uF | 10% | 16V |
| C040 | 1-162-970-11 | CERAMIC CHIP | 0.01uF | 10% | 25V |
| C041 | 1-162-970-11 | CERAMIC CHIP | 0.01uF | 10% | 25V |
| C042 | 1-164-677-11 | CERAMIC CHIP | 0.033uF | 10% | 16V |
| C043 | 1-164-677-11 | CERAMIC CHIP | 0.033uF | 10% | 16V |
| C044 | 1-162-963-11 | CERAMIC CHIP | 680PF | 10% | 50V |
| C045 | 1-115-416-11 | CERAMIC CHIP | 0.001uF | 5% | 25V |
| C046 | 1-107-826-11 | CERAMIC CHIP | 0.1uF | 10% | 16V |
| C047 | 1-107-826-11 | CERAMIC CHIP | 0.1uF | 10% | 16V |
| C048 | 1-165-176-11 | CERAMIC CHIP | 0.047uF | 10% | 16V |
| C049 | 1-128-993-21 | ELECT CHIP | 22uF | 20% | 10V |
| C050 | 1-128-993-21 | ELECT CHIP | 22uF | 20% | 10V |
| C051 | 1-107-826-11 | CERAMIC CHIP | 0.1uF | 10% | 16V |
| C052 | 1-107-826-11 | CERAMIC CHIP | 0.1uF | 10% | 16V |
| C055 | 1-128-993-21 | ELECT CHIP | 22uF | 20% | 10V |
| C060 | 1-107-826-11 | CERAMIC CHIP | 0.1uF | 10% | 16V |
| C064 | 1-107-826-11 | CERAMIC CHIP | 0.1uF | 10% | 16V |
| C068 | 1-107-826-11 | CERAMIC CHIP | 0.1uF | 10% | 16V |
| C069 | 1-107-826-11 | CERAMIC CHIP | 0.1uF | 10% | 16V |
| C070 | 1-128-993-21 | ELECT CHIP | 22uF | 20% | 10V |
| C071 | 1-128-993-21 | ELECT CHIP | 22uF | 20% | 10V |
| C081 | 1-164-357-11 | CERAMIC CHIP | 0.001uF | 5% | 50V |
| C082 | 1-164-357-11 | CERAMIC CHIP | 0.001uF | 5% | 50V |
| C084 | 1-107-826-11 | CERAMIC CHIP | 0.1uF | 10% | 16V |
| C094 | 1-128-993-21 | ELECT CHIP | 22uF | 20% | 10V |
| C095 | 1-107-826-11 | CERAMIC CHIP | 0.1uF | 10% | 16V |
| | | < CONNECTOR > | | | |
| CN001 | 1-774-731-21 | PIN, CONNECTOR (PC BOARD) 5P | | | |
| CN002 | 1-770-161-21 | PIN, CONNECTOR (PC BOARD) 6P | | | |
| CN003 | 1-794-707-11 | CONNECTOR, FFC/FPC 25P | | | |
| CN005 | 1-784-883-21 | CONNECTOR, FFC (LIF (NON-ZIF)) 35P | | | |
| | | < DIODE > | | | |
| D001 | 8-719-016-74 | DIODE 1SS352 | | | |
| D002 | 8-719-016-74 | DIODE 1SS352 | | | |
| | | < IC > | | | |
| IC001 | 8-752-403-50 | IC CXD1881R | | | |
| IC004 | 8-759-058-45 | IC NJM3403AV | | | |
| IC081 | 8-759-701-40 | IC NJM3404AM-T1 | | | |

| Ref. No. | Part No. | Description | | | Remark |
|---|---|---|---|---|---|
| | | < COIL > | | | |
| L001 | 1-412-031-11 | INDUCTOR CHIP | 47uH | | |
| L002 | 1-412-031-11 | INDUCTOR CHIP | 47uH | | |
| L003 | 1-412-031-11 | INDUCTOR CHIP | 47uH | | |
| | | < TRANSISTOR > | | | |
| Q001 | 8-729-805-25 | TRANSISTOR | 2SB1121-S | | |
| Q002 | 8-729-805-25 | TRANSISTOR | 2SB1121-S | | |
| Q003 | 8-729-805-25 | TRANSISTOR | 2SB1121-S | | |
| Q005 | 8-729-820-90 | TRANSISTOR | 2SD1621-ST | | |
| | | < RESISTOR > | | | |
| R001 | 1-216-864-11 | METAL CHIP | 0 | 5% | 1/16W |
| R002 | 1-218-668-11 | METAL CHIP | 100 | 0.5% | 1/16W |
| R003 | 1-216-839-11 | METAL CHIP | 33K | 5% | 1/16W |
| R005 | 1-216-864-11 | METAL CHIP | 0 | 5% | 1/16W |
| R006 | 1-216-864-11 | METAL CHIP | 0 | 5% | 1/16W |
| R007 | 1-216-864-11 | METAL CHIP | 0 | 5% | 1/16W |
| R008 | 1-216-864-11 | METAL CHIP | 0 | 5% | 1/16W |
| R011 | 1-216-864-11 | METAL CHIP | 0 | 5% | 1/16W |
| R012 | 1-216-864-11 | METAL CHIP | 0 | 5% | 1/16W |
| R013 | 1-216-864-11 | METAL CHIP | 0 | 5% | 1/16W |
| R014 | 1-216-864-11 | METAL CHIP | 0 | 5% | 1/16W |
| R015 | 1-216-803-11 | METAL CHIP | 33 | 5% | 1/16W |
| R016 | 1-216-821-11 | METAL CHIP | 1K | 5% | 1/16W |
| R017 | 1-216-817-11 | METAL CHIP | 470 | 5% | 1/16W |
| R018 | 1-216-821-11 | METAL CHIP | 1K | 5% | 1/16W |
| R019 | 1-216-803-11 | METAL CHIP | 33 | 5% | 1/16W |
| R020 | 1-216-817-11 | METAL CHIP | 470 | 5% | 1/16W |
| R021 | 1-219-570-11 | RES-CHIP | 10M | 5% | 1/16W |
| R022 | 1-218-718-11 | METAL CHIP | 12K | 0.5% | 1/16W |
| R023 | 1-216-864-11 | METAL CHIP | 0 | 5% | 1/16W |
| R024 | 1-216-864-11 | METAL CHIP | 0 | 5% | 1/16W |
| R025 | 1-216-864-11 | METAL CHIP | 0 | 5% | 1/16W |
| R027 | 1-216-864-11 | METAL CHIP | 0 | 5% | 1/16W |
| R029 | 1-216-841-11 | METAL CHIP | 47K | 5% | 1/16W |
| R030 | 1-216-864-11 | METAL CHIP | 0 | 5% | 1/16W |
| R031 | 1-216-864-11 | METAL CHIP | 0 | 5% | 1/16W |
| R032 | 1-216-864-11 | METAL CHIP | 0 | 5% | 1/16W |
| R033 | 1-216-864-11 | METAL CHIP | 0 | 5% | 1/16W |
| R036 | 1-216-833-11 | METAL CHIP | 10K | 5% | 1/16W |
| R044 | 1-216-832-11 | METAL CHIP | 8.2K | 5% | 1/16W |
| R046 | 1-218-668-11 | METAL CHIP | 100 | 0.5% | 1/16W |
| R053 | 1-216-864-11 | METAL CHIP | 0 | 5% | 1/16W |
| R054 | 1-216-864-11 | METAL CHIP | 0 | 5% | 1/16W |
| R060 | 1-216-864-11 | METAL CHIP | 0 | 5% | 1/16W |
| R065 | 1-218-716-11 | METAL CHIP | 10K | 0.5% | 1/16W |
| R066 | 1-218-716-11 | METAL CHIP | 10K | 0.5% | 1/16W |
| R068 | 1-216-839-11 | METAL CHIP | 33K | 5% | 1/16W |
| R082 | 1-216-833-11 | METAL CHIP | 10K | 5% | 1/16W |
| R083 | 1-216-833-11 | METAL CHIP | 10K | 5% | 1/16W |
| R084 | 1-216-833-11 | METAL CHIP | 10K | 5% | 1/16W |
| R085 | 1-216-833-11 | METAL CHIP | 10K | 5% | 1/16W |
| R086 | 1-216-833-11 | METAL CHIP | 10K | 5% | 1/16W |
| R087 | 1-216-833-11 | METAL CHIP | 10K | 5% | 1/16W |
| R088 | 1-216-864-11 | METAL CHIP | 0 | 5% | 1/16W |
| R089 | 1-216-864-11 | METAL CHIP | 0 | 5% | 1/16W |

**RF** **SWITCH**

| Ref. No. | Part No. | Description | | | Remark |
|---|---|---|---|---|---|
| R093 | 1-216-803-11 | METAL CHIP | 33 | 5% | 1/16W |
| R094 | 1-216-803-11 | METAL CHIP | 33 | 5% | 1/16W |
| R097 | 1-216-839-11 | METAL CHIP | 33K | 5% | 1/16W |
| R098 | 1-216-839-11 | METAL CHIP | 33K | 5% | 1/16W |

*************************************************************

| | | | | |
|---|---|---|---|---|
| * | 1-641-764-11 | SWITCH BOARD | | |
| | | ************* | | |
| | | < CAPACITOR > | | |
| C001 | 1-161-494-00 | CERAMIC | 0.022uF | 25V |
| | | < SWITCH > | | |
| S001 | 1-571-300-11 | SWITCH, ROTARY (LOADING IN) | | |
| S002 | 1-571-300-11 | SWITCH, ROTARY (LOADING OUT) | | |

*************************************************************

MISCELLANEOUS
**************

| | | |
|---|---|---|
| 103 | 1-757-098-11 | WIRE (FLAT TYPE) (35 CORE) |
| 108 | 1-757-095-11 | WIRE (FLAT TYPE) (9 CORE) |
| 109 | 1-757-096-11 | WIRE (FLAT TYPE) (16 CORE) |
| ⚠552 | 8-820-132-03 | OPTICAL PICK-UP (KHM-230AAA/J1RP) |
| 557 | 1-757-097-11 | WIRE (FLAT TYPE) (25 CORE) |
| M1 | A-4604-347-A | MOTOR (L) ASSY (LOADING) |
| ⚠T401 | 1-435-706-11 | TRANSFORMER, POWER (ANALOG) |
| ⚠T402 | 1-435-707-11 | TRANSFORMER, POWER (DIGITAL) |

*************************************************************

**************
HARDWARE LIST
**************

| | | |
|---|---|---|
| #1 | 7-685-887-09 | SCREW +BVTT 4X25 (S) |
| #2 | 7-685-647-79 | SCREW +P 3X10 TYPE2 SLIT |
| #3 | 7-685-548-19 | SCREW +BTP 3X12 TYPE2 N-S |
| #4 | 7-682-548-09 | SCREW (3X8) |
| #5 | 7-685-659-79 | SCREW +BVTP 4X8 TYPE2 N-S |
| #6 | 7-685-871-01 | SCREW +BVTT 3X6 (S) |
| #7 | 7-685-646-79 | SCREW, TAPPING |
| #8 | 7-685-872-09 | SCREW +BVTT 3X8 (S) |
| #9 | 7-688-003-12 | W 3, MIDDLE |
| #10 | 7-682-544-04 | SCREW +P 3X3 |
| #11 | 7-685-871-09 | SCREW +BVTT 3X6 (S) |
| #12 | 7-624-105-04 | STOP RING 2.3, TYPE -E |
| #13 | 7-685-903-21 | SCREW +PTPWH 3X8 (TYPE2) |
| #14 | 7-682-547-04 | SCREW (+BVTT M3 S) |

*************************************************************

ACCESSORIES & PACKING MATERIALS
*******************************

| | | |
|---|---|---|
| | 1-418-994-11 | REMOTE COMMANDER (RM-SX90) |
| ⚠ | 1-551-631-22 | CORD, POWER |
| | 1-791-732-11 | CORD, CONNECTION |
| | 4-230-645-11 | MANUAL, INSTRUCTION (ENGLISH, FRENCH, SPANISH, PORTUGUESE) |
| | 4-230-645-21 | MANUAL, INSTRUCTION (GERMAN, ITALIAN, DUTCH, SWEDISH) |
| | 4-983-956-01 | COVER, BATTERY (for RM-SX90) |

The components identified by mark ⚠ or dotted line with mark ⚠ are critical for safety.
Replace only with part number specified.

9-929-542-11

**Sony Corporation**
**Audio Entertainment Group**

2000J057541-1
Printed in Hungary
© 2000. 10
**Published by General Engineering Dept.**